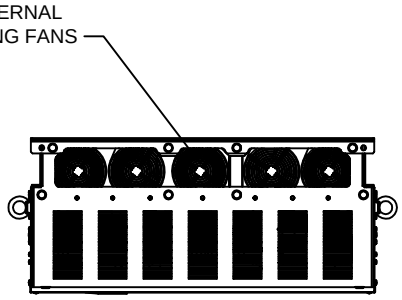

LIFTING AND EYEBOLT DETAILS

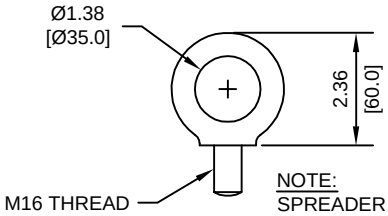

NOTE:
SPREADER BAR REQUIRED TO
AVOID DAMAGE DURING LIFTING

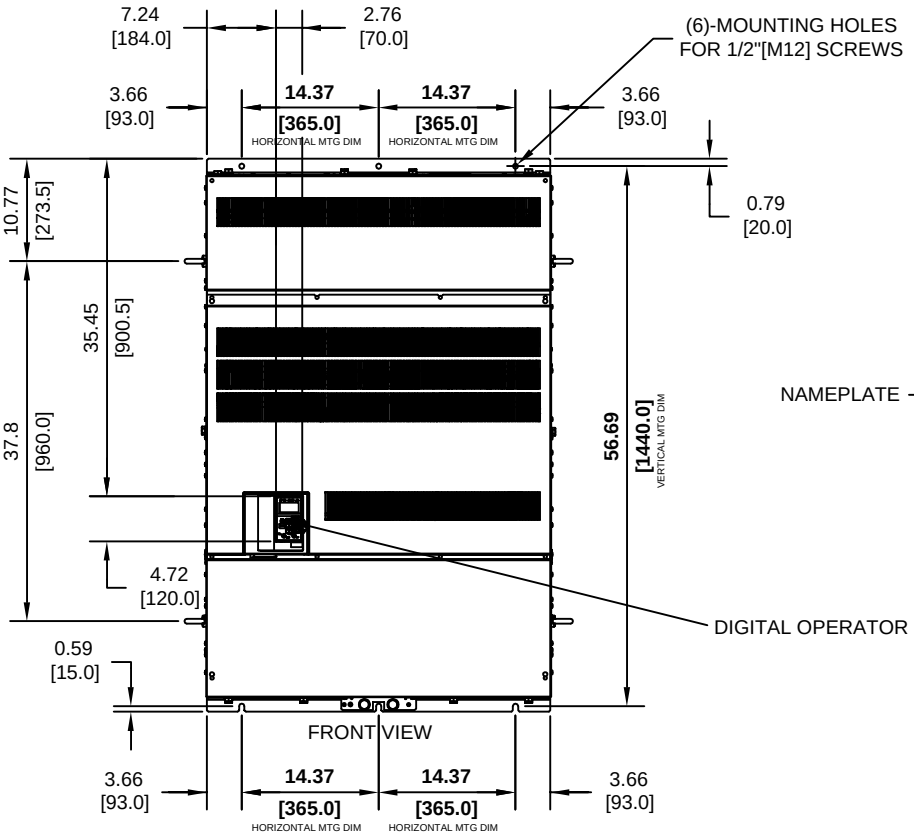

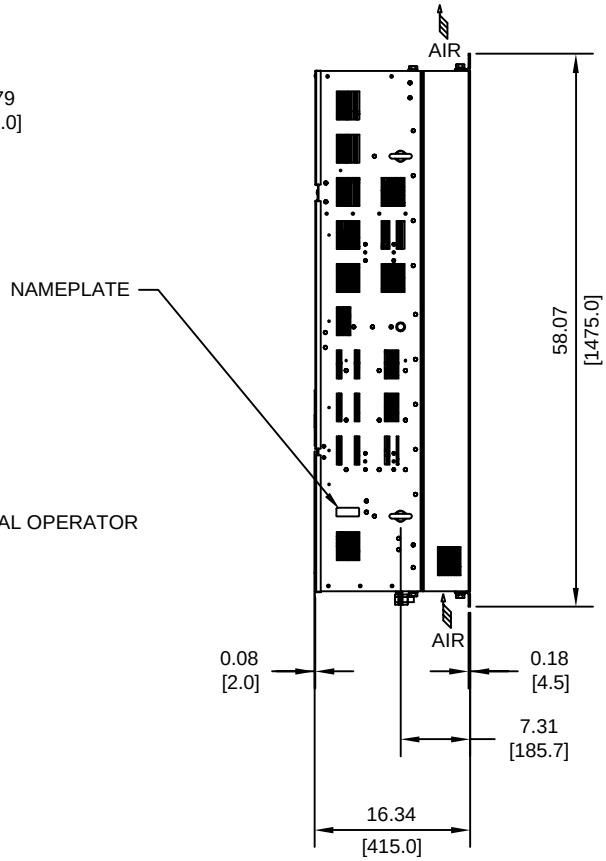

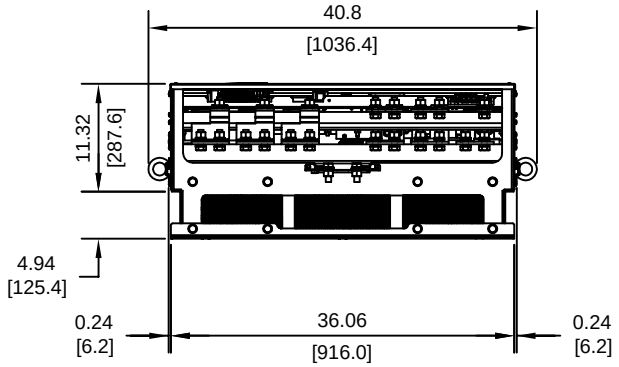

MODEL # CIMR-E7U	VOLTAGE (VAC)	OUTPUT CURRENT (A)	WEIGHT LBS (Kg)	HEAT LOSS (W)		
				INT	EXT	TOTAL
4300	480	675	891 (405)	2482	5838	8320

INT=INTERNAL COMPONENTS
EXT=EXTERNAL HEATSINK

FOR ADDITIONAL DETAILS AND SPECIFICATIONS, CONSULT MANUAL

TOLERANCES/REFERENCES: - - - - - -	YASKAWA A World of Automation Solutions™	DRAWN: J. MATTAS	DATE 5-2-05	TITLE: E7 DIMENSION DRAWING FRAME SIZE 15 IP00 ENCLOSURE E7U4300
	YASKAWA ELECTRIC AMERICA, INC. Corporate Headquarters 2121 Norman Drive South Waukegan, IL 60085 1-800-YASKAWA http://www.yaskawa.com	CHECKED: M. RUCINSKI	DATE 6-5-05	SIZE A / REVISION R00 / PAGE 1 of 3
		TECH: J. CAIRO	DATE 5-4-05	
		APPROVED: T. SASADA	DATE 6-6-05	
UNITS: IN[mm] / SCALE: 1:20		ORIGINAL DESIGN: -	DATE -	DRAWING #: DD.E7.FR15.IP00.01

TERMINAL AND WIRING DETAILS (SCALE 1:20)

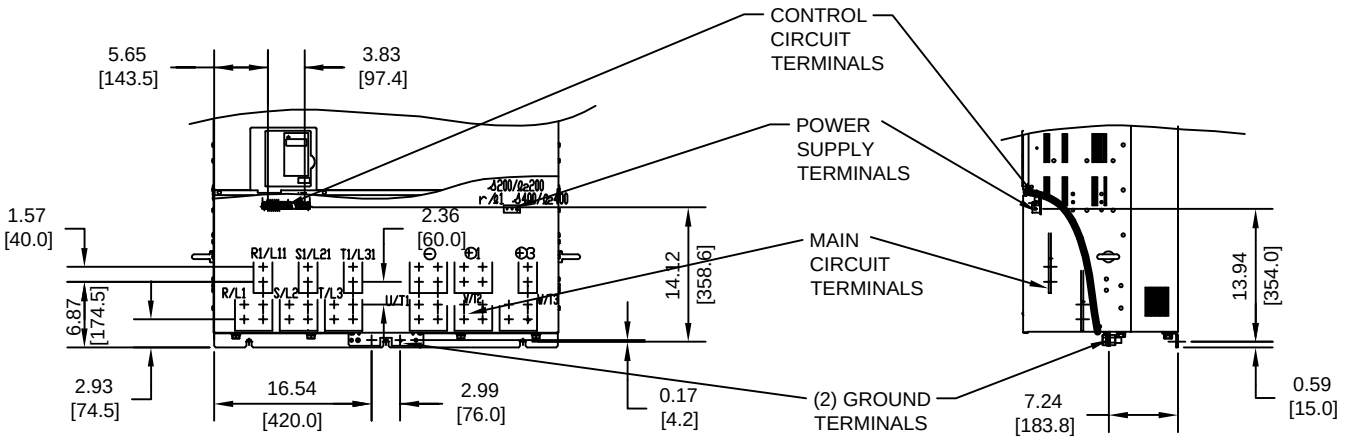

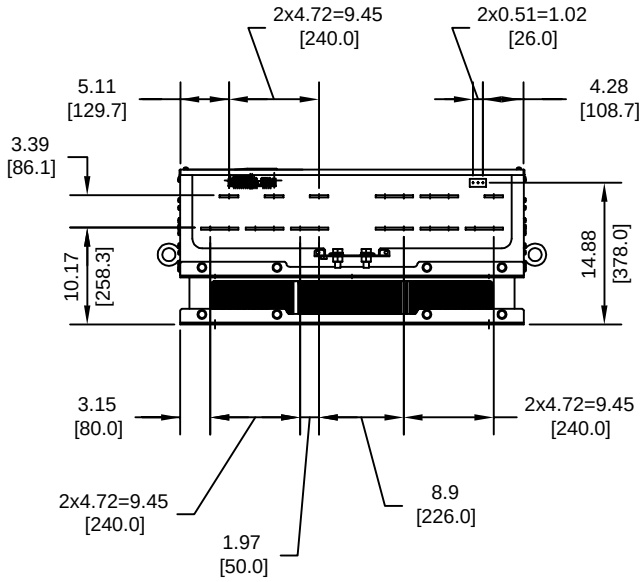

TERMINAL AND WIRE SPECIFICATIONS FOR MAIN CIRCUIT AND GROUND

MODEL # CIMR-E7U	TERMINAL SYMBOL	TERMINAL SCREW	CLAMPING TORQUE lb.in.(N.m.)
4300	R/L1, S/L2, T/L3, ⊖, ⊕1, ⊕, ⊕3, U/T1, V/T2, W/T3, R1/L11, S1/L21, T1/L31	M16	694 TO 867 (78.4 TO 98.0)
	r/l1, s200/l2200, s400/l2400	M4	11.4 TO 12.3 (1.3 TO 1.4)

NOTE: REFER TO APPLICABLE CODES FOR PROPER WIRE TYPE AND SIZE

FOR ADDITIONAL DETAILS AND SPECIFICATIONS, CONSULT MANUAL

TOLERANCES/REFERENCES: - - - - - -	YASKAWA A World of Automation Solutions™	DRAWN: J. MATTAS	DATE 5-2-05	TITLE: E7 DIMENSION DRAWING FRAME SIZE 15 IP00 ENCLOSURE E7U4300
	YASKAWA ELECTRIC AMERICA, INC. Corporate Headquarters 2121 Norman Drive South Waukegan, IL 60085 1-800-YASKAWA http://www.yaskawa.com	CHECKED: M. RUCINSKI	DATE 6-5-05	SIZE A / REVISION R00 / PAGE 2 of 3
		TECH: J. CAIRO	DATE 5-4-05	
		APPROVED: T. SASADA	DATE 6-6-05	
UNITS: IN[mm] / SCALE: BY VIEW		ORIGINAL DESIGN: -	DATE -	DRAWING #: DD.E7.FR15.IP00.01

MINIMUM INSTALLATION CLEARANCES (SCALE 1:20)

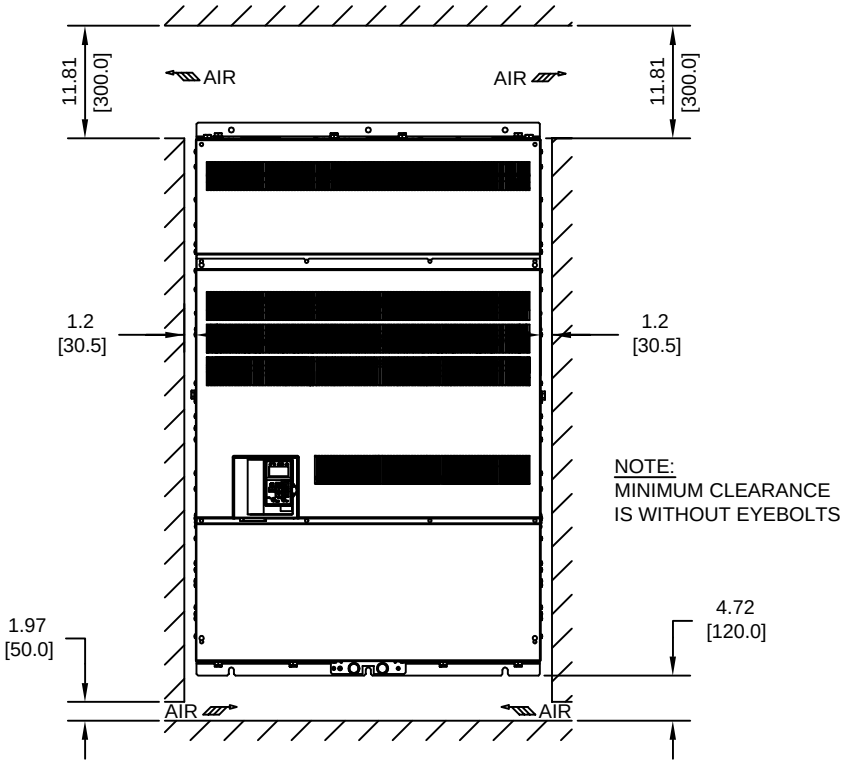

PANEL CUTOUT FOR EXTERNAL HEATSINK
MOUNTING CONFIGURATION (SCALE 1:20)

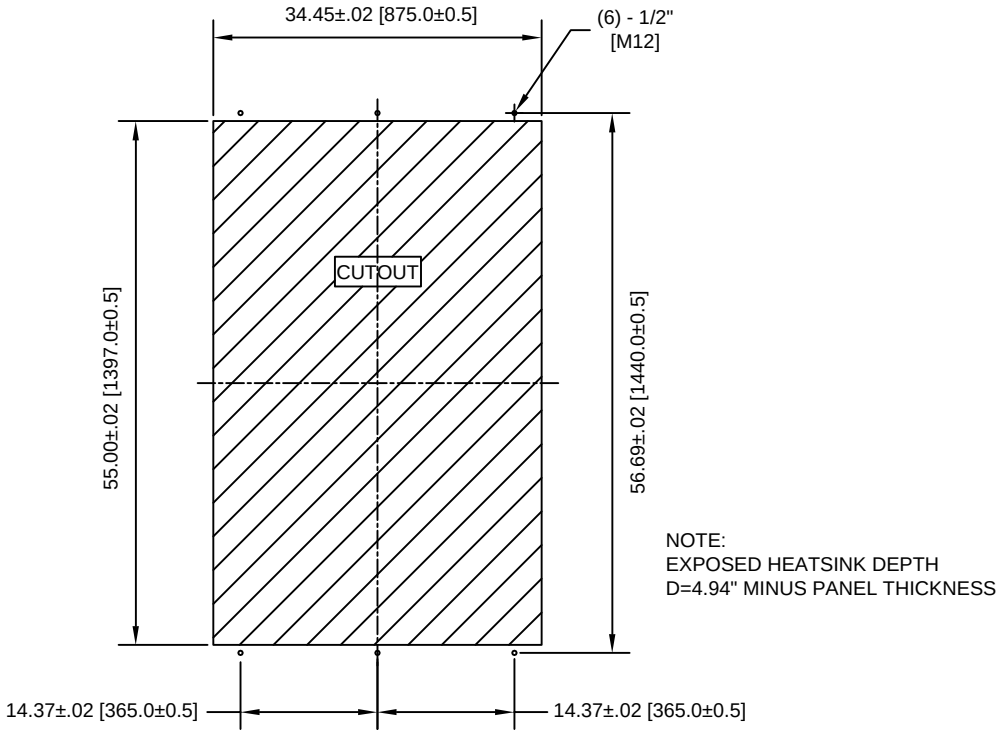

FOR ADDITIONAL DETAILS AND SPECIFICATIONS, CONSULT MANUAL

TOLERANCES/REFERENCES: - - - - - -	YASKAWA A World of Automation Solutions™	DRAWN: J. MATTAS	DATE 5-2-05	TITLE: E7 DIMENSION DRAWING FRAME SIZE 15 IP00 ENCLOSURE E7U4300
	YASKAWA ELECTRIC AMERICA, INC. Corporate Headquarters 2121 Norman Drive South Waukegan, IL 60085 1-800-YASKAWA http://www.yaskawa.com	CHECKED: M. RUCINSKI	DATE 6-5-05	SIZE A / REVISION R00 / PAGE 3 of 3
		TECH: J. CAIRO	DATE 5-4-05	
		APPROVED: T. SASADA	DATE 6-6-05	
UNITS: IN[mm] / SCALE: BY VIEW		ORIGINAL DESIGN: -	DATE -	DRAWING #: DD.E7.FR15.IP00.01