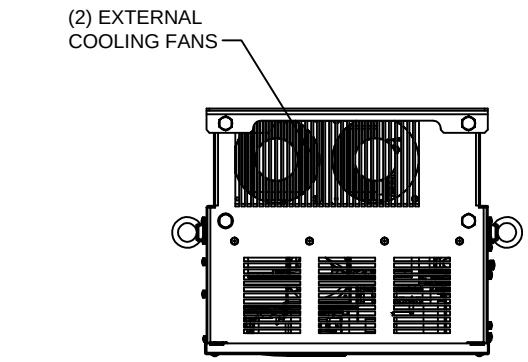

LIFTING AND EYEBOLT DETAILS

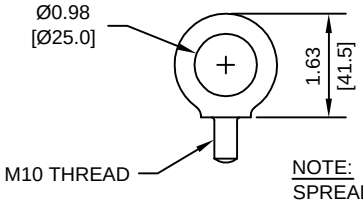

NOTE:
SPREADER BAR REQUIRED TO
AVOID DAMAGE DURING LIFTING

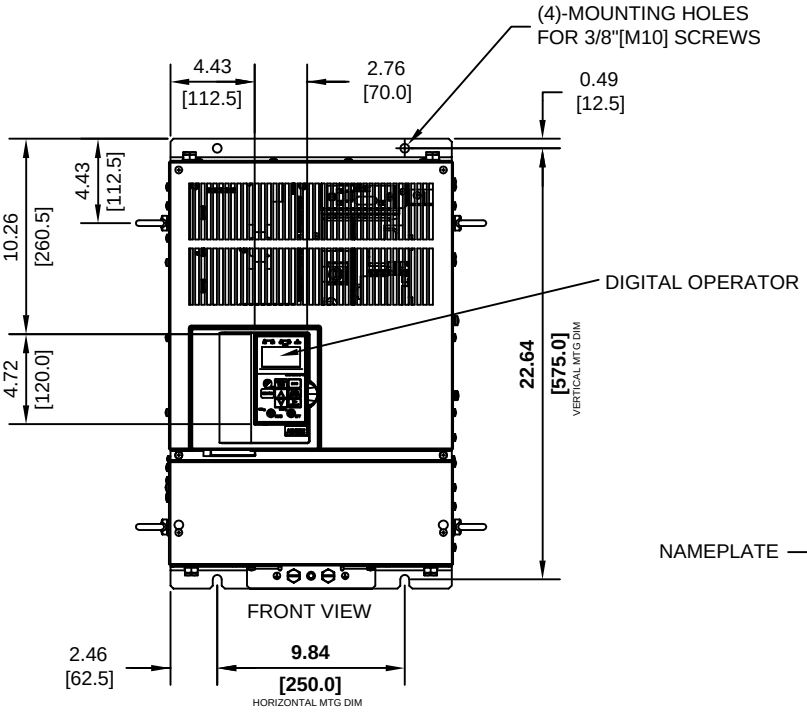

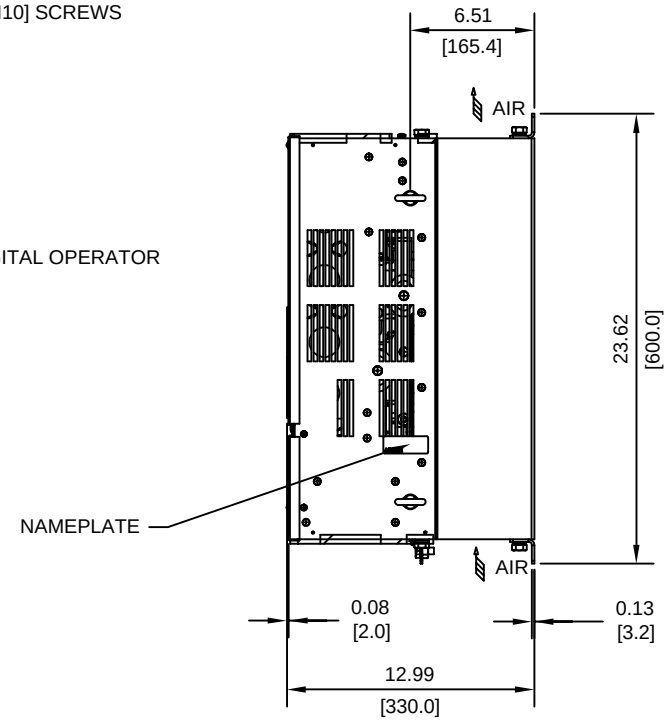

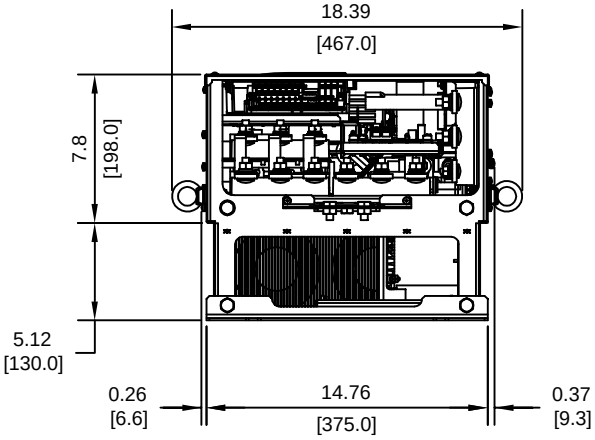

MODEL # CIMR-E7U	VOLTAGE (VAC)	OUTPUT CURRENT (A)	WEIGHT LBS (Kg)	HEAT LOSS (W)		
				INT	EXT	TOTAL
2045	208/230	192	139 (63)	500	1227	1727

INT=INTERNAL COMPONENTS
EXT=EXTERNAL HEATSINK

FOR ADDITIONAL DETAILS AND SPECIFICATIONS, CONSULT MANUAL

TOLERANCES/REFERENCES: - - - - - -	YASKAWA A World of Automation Solutions™	DRAWN: J. MATTAS	DATE 4-14-05	TITLE: E7 DIMENSION DRAWING FRAME SIZE 8 IP00 ENCLOSURE E7U2045
	YASKAWA ELECTRIC AMERICA, INC. Corporate Headquarters 2121 Norman Drive South Waukegan, IL 60085 1-800-YASKAWA http://www.yaskawa.com	CHECKED: M. RUCINSKI	DATE 5-3-05	
		TECH: J. CAIRO	DATE 4-15-05	SIZE A / REVISION R00 / PAGE 1 of 3
		APPROVED: T. SASADA	DATE 6-6-05	
UNITS: IN[mm] / SCALE: 1:10		ORIGINAL DESIGN: -	DATE -	DRAWING #: DD.E7.FR8.IP00.01

TERMINAL AND WIRING DETAILS (SCALE 1:8)

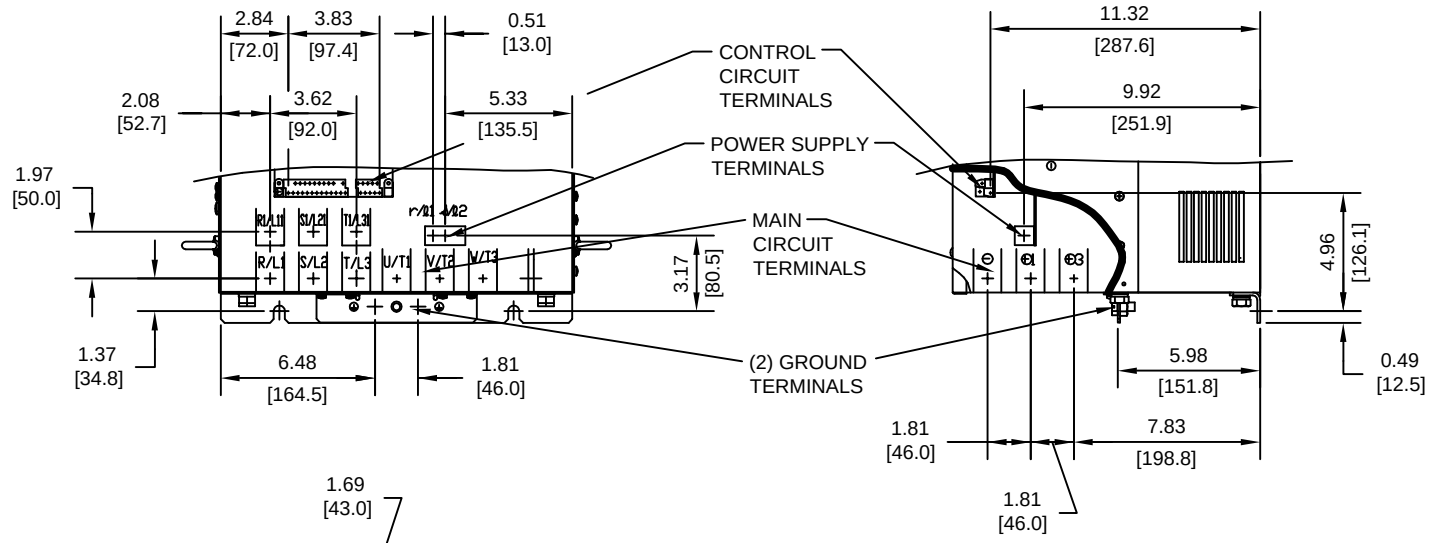

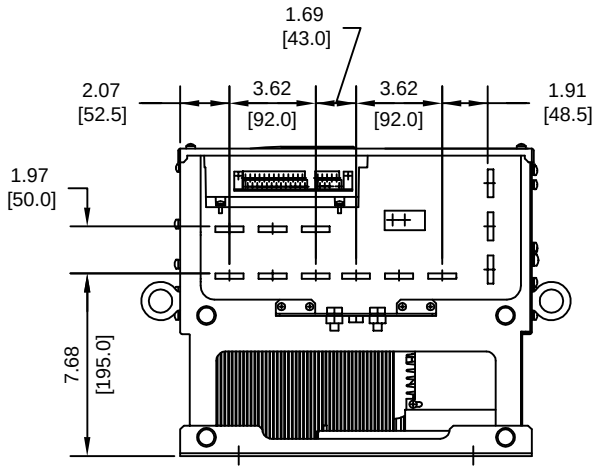

TERMINAL SPECIFICATIONS FOR
MAIN CIRCUIT AND GROUND

MODEL # CIMR-E7U	TERMINAL SYMBOL	TERMINAL SCREW	CLAMPING TORQUE lb.in.(N.m.)
2045	R/L1, S/L2, T/L3, ⊖, ⊕1, R1/L11, S1/L21, T1/L31, U/T1, V/T2, W/T3, ⏚	M10	155 TO 198 (17.6 TO 22.5)
	⊕3	M8	77.4 TO 95.0 (8.8 TO 10.8)
	r/ℓ1, s/ℓ2	M4	11.4 TO 12.3 (1.3 TO 1.4)

NOTE: REFER TO APPLICABLE CODES FOR PROPER WIRE TYPE AND SIZE

FOR ADDITIONAL DETAILS AND SPECIFICATIONS, CONSULT MANUAL

TOLERANCES/REFERENCES: - - - - - -

UNITS: IN[mm] SCALE: BY VIEW

YASKAWA
A World of Automation Solutions™

YASKAWA ELECTRIC AMERICA, INC.
Corporate Headquarters
2121 Norman Drive South
Waukegan, IL 60085
1-800-YASKAWA
http://www.yaskawa.com

DRAWN: J. MATTAS	DATE 4-14-05	TITLE: E7 DIMENSION DRAWING FRAME SIZE 8 IP00 ENCLOSURE E7U2045
CHECKED: M. RUCINSKI	DATE 5-3-05	
TECH: J. CAIRO	DATE 4-15-05	SIZE A / REVISION R00 / PAGE 2 of 3
APPROVED: T. SASADA	DATE 6-6-05	
ORIGINAL DESIGN: -	DATE -	DRAWING #: DD.E7.FR8.IP00.01

MINIMUM INSTALLATION CLEARANCES (SCALE 1:10)

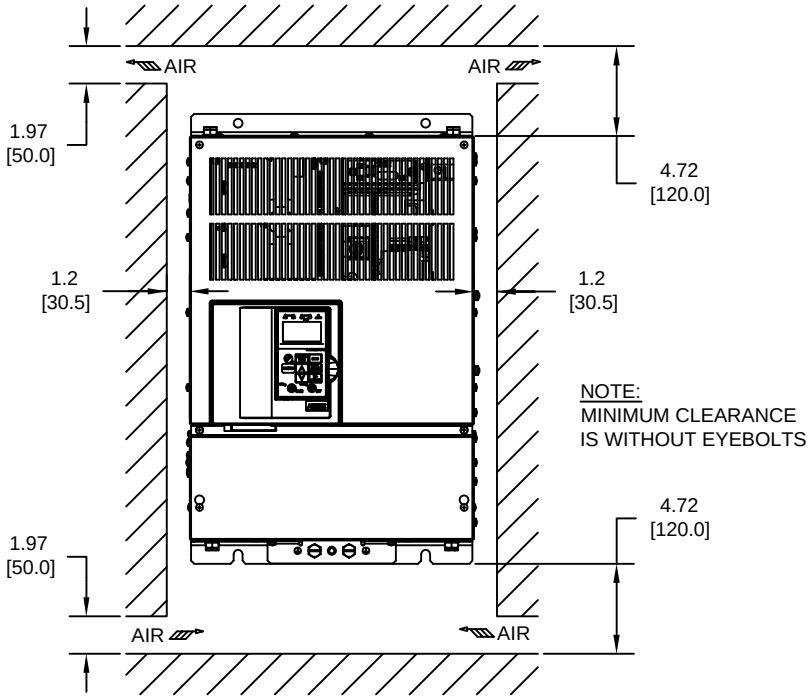

PANEL CUTOUT FOR EXTERNAL HEATSINK
MOUNTING CONFIGURATION (SCALE 1:10)

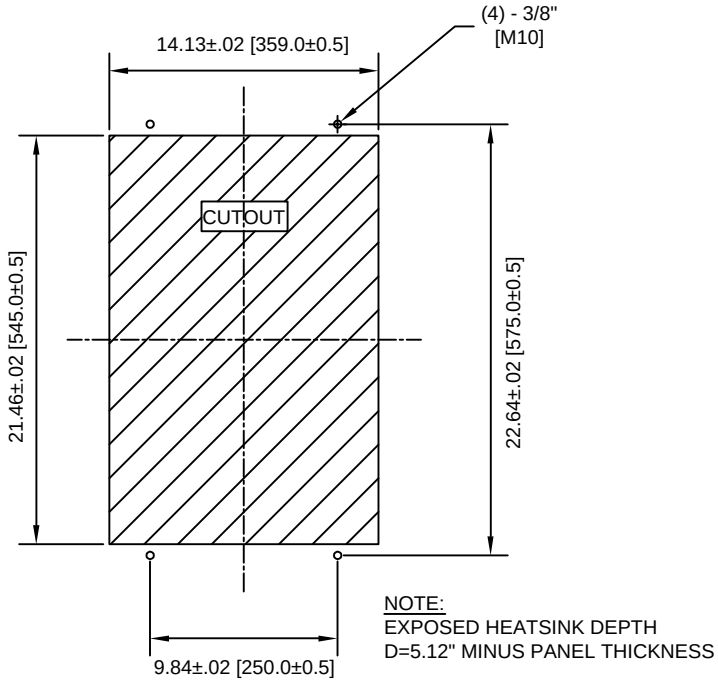

FOR ADDITIONAL DETAILS AND SPECIFICATIONS, CONSULT MANUAL

TOLERANCES/REFERENCES: - - - - - -	YASKAWA A World of Automation Solutions™	DRAWN: J. MATTAS	DATE 4-14-05	TITLE: E7 DIMENSION DRAWING FRAME SIZE 8 IP00 ENCLOSURE E7U2045	
	YASKAWA ELECTRIC AMERICA, INC. Corporate Headquarters 2121 Norman Drive South Waukegan, IL 60085 1-800-YASKAWA http://www.yaskawa.com	CHECKED: M. RUCINSKI	DATE 5-3-05		
		TECH: J. CAIRO	DATE 4-15-05	SIZE A	REVISION R00 / PAGE 3 of 3
		APPROVED: T. SASADA	DATE 6-6-05		
UNITS: IN[mm]	SCALE: BY VIEW	ORIGINAL DESIGN: -	DATE -	DRAWING #: DD.E7.FR8.IP00.01	