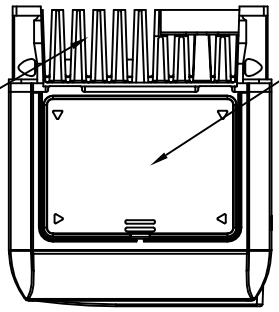

NOTE:
PROTECTIVE COVERS ARE FACTORY INSTALLED TO THE TOP AND BOTTOM OF THE DRIVE TO MEET IP20 & NEMA TYPE 1 REQUIREMENTS, RESULTING IN AN AMBIENT TEMPERATURE RATING OF 104F(40C). REMOVE THESE COVERS WHEN OPERATING THE DRIVE WITHIN A PANEL TO OBTAIN THE MAXIMUM SURROUNDING AIR TEMPERATURE RATING OF 113F(45C). REMOVING THESE COVERS RESULTS IN AN ENCLOSURE RATING OF IP00.

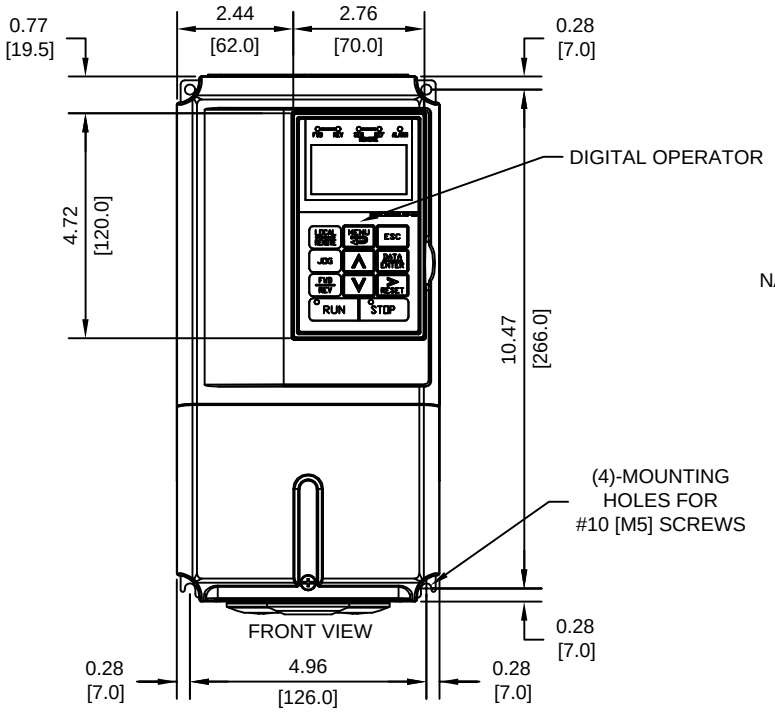

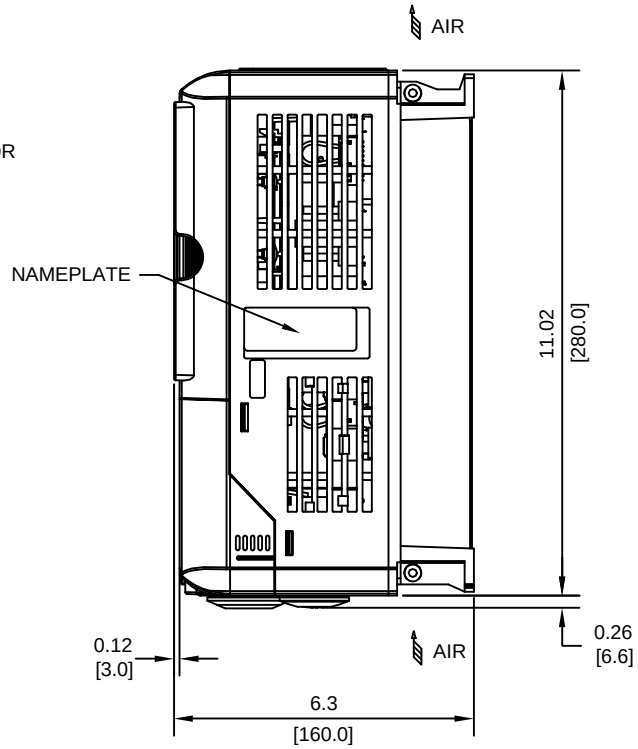

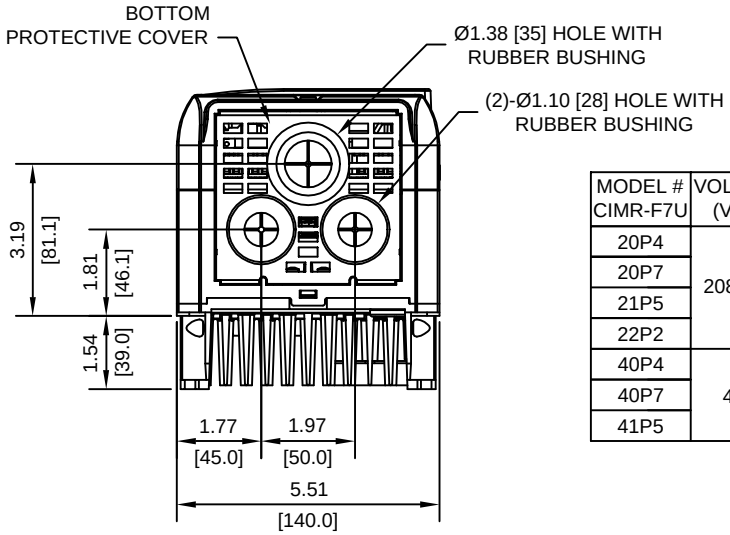

MODEL # CIMR-F7U	VOLTAGE (VAC)	OUTPUT CURRENT (A)		WEIGHT LBS (Kg)	HEAT LOSS (W)		
		ND2	HD		INT	EXT	TOTAL
20P4	208/240	3.6	3.2	6.6 (3.0)	39	19	58
20P7		4.6	4.1	6.6 (3.0)	42	26	68
21P5		7.8	7.0	6.6 (3.0)	50	48	98
22P2		10.8	9.6	6.6 (3.0)	59	68	127
40P4	480	1.8	1.8	6.6 (3.0)	39	14	53
40P7		2.1	2.1	6.6 (3.0)	41	17	58
41P5		3.7	3.7	6.6 (3.0)	48	36	84

ND2=NORMAL DUTY 2
HD=HEAVY DUTY

INT=INTERNAL COMPONENTS
EXT=EXTERNAL HEATSINK

FOR ADDITIONAL DETAILS AND SPECIFICATIONS, CONSULT MANUAL

TOLERANCES/REFERENCES:
-
-
-
-
-
-

UNITS: IN[mm] | SCALE: 1:4

YASKAWA
A World of Automation Solutions™

YASKAWA ELECTRIC AMERICA, INC.
Corporate Headquarters
2121 Norman Drive South
Waukegan, IL 60085
1-800-YASKAWA
http://www.yaskawa.com

DRAWN: J. MATTAS	DATE 4-14-03	TITLE: F7 DIMENSION DRAWING FRAME SIZE 1 NEMA TYPE 1/IP20 AND IP00 F7U20P4 TO 22P2, 40P4 TO 41P5	
CHECKED: M. RUCINSKI	DATE 5-13-03		
TECH: J. CAIRO	DATE 4-28-03	SIZE A	REVISION A
APPROVED: T. SASADA	DATE 5-13-03		PAGE 1 of 2
ORIGINAL DESIGN: -	DATE -	DRAWING #: DD.F7.FR1.N1.01	

TERMINAL AND WIRING DETAILS (SCALE 1:3)

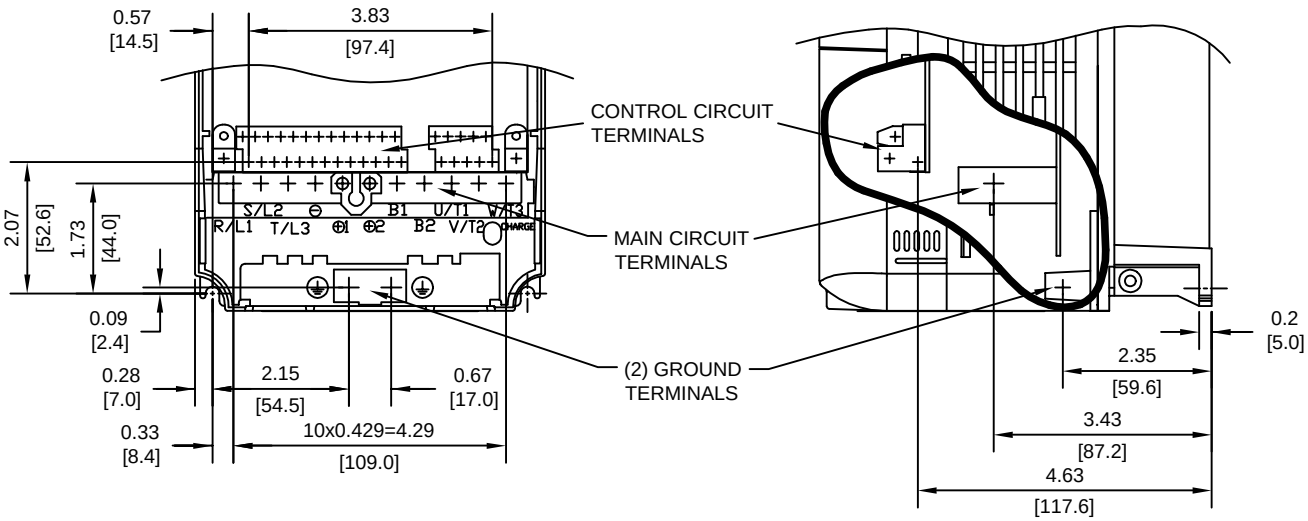

TERMINAL AND WIRE SPECIFICATIONS FOR MAIN CIRCUIT AND GROUND

MODEL # CIMR-F7U	TERMINAL SCREW	CLAMPING TORQUE lb.in.(N.m.)	WIRE RANGE AWG(mm^2)
20P4	M4	10.6 TO 13.2 (1.2 TO 1.5)	18-10 (0.82-5.5)
20P7	M4	10.6 TO 13.2 (1.2 TO 1.5)	18-10 (0.82-5.5)
21P5	M4	10.6 TO 13.2 (1.2 TO 1.5)	18-10 (0.82-5.5)
22P2	M4	10.6 TO 13.2 (1.2 TO 1.5)	18-10 (0.82-5.5)
40P4	M4	10.6 TO 13.2 (1.2 TO 1.5)	18-10 (0.82-5.5)
40P7	M4	10.6 TO 13.2 (1.2 TO 1.5)	18-10 (0.82-5.5)
41P5	M4	10.6 TO 13.2 (1.2 TO 1.5)	18-10 (0.82-5.5)

NOTE: REFER TO APPLICABLE CODES FOR PROPER WIRE TYPE AND SIZE

SIMPLIFIED REAR VIEW (SCALE 1:6)

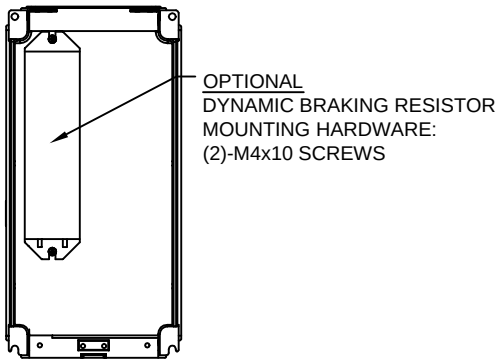

MINIMUM INSTALLATION CLEARANCES (SCALE 1:8)

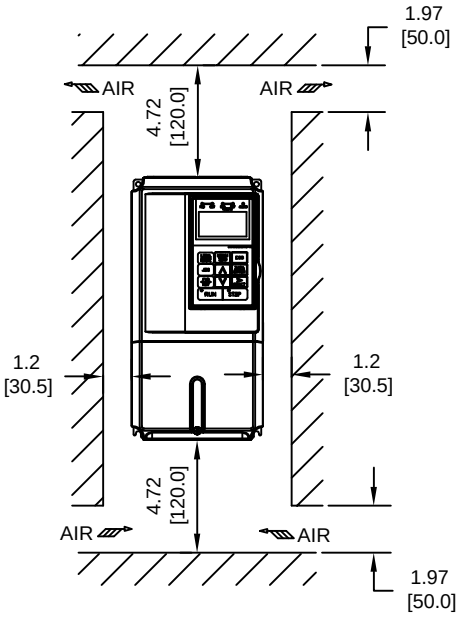

PANEL CUTOUT FOR EXTERNAL HEATSINK MOUNTING CONFIGURATION (SCALE 1:8)

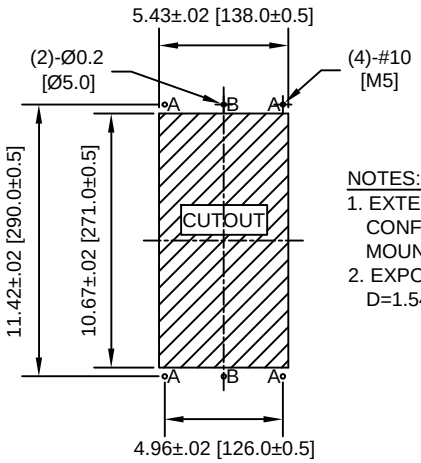

NOTES:
1. EXTERNAL HEATSINK CONFIGURATION REQUIRES MOUNTING KIT
2. EXPOSED HEATSINK DEPTH D=1.54" MINUS PANEL THICKNESS

FOR ADDITIONAL DETAILS AND SPECIFICATIONS, CONSULT MANUAL

TOLERANCES/REFERENCES: - - - - - -	YASKAWA A World of Automation Solutions™	DRAWN: J. MATTAS	DATE 4-14-03	TITLE: F7 DIMENSION DRAWING FRAME SIZE 1 NEMA TYPE 1/IP20 AND IP00 F7U20P4 TO 22P2, 40P4 TO 41P5
	YASKAWA ELECTRIC AMERICA, INC. Corporate Headquarters 2121 Norman Drive South Waukegan, IL 60085 1-800-YASKAWA http://www.yaskawa.com	CHECKED: M. RUCINSKI	DATE 5-13-03	SIZE A / REVISION A / PAGE 2 of 2
		TECH: J. CAIRO	DATE 4-28-03	
		APPROVED: T. SASADA	DATE 5-13-03	
UNITS: IN[mm] / SCALE: BY VIEW		ORIGINAL DESIGN: -	DATE -	DRAWING #: DD.F7.FR1.N1.01