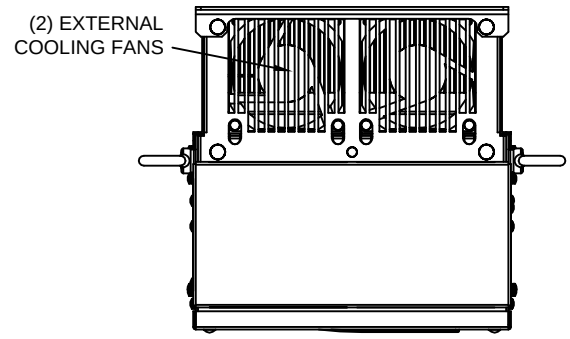

LIFTING AND EYEBOLT DETAILS

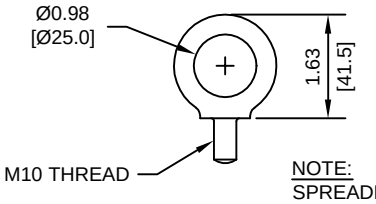

NOTE:
SPREADER BAR REQUIRED TO
AVOID DAMAGE DURING LIFTING

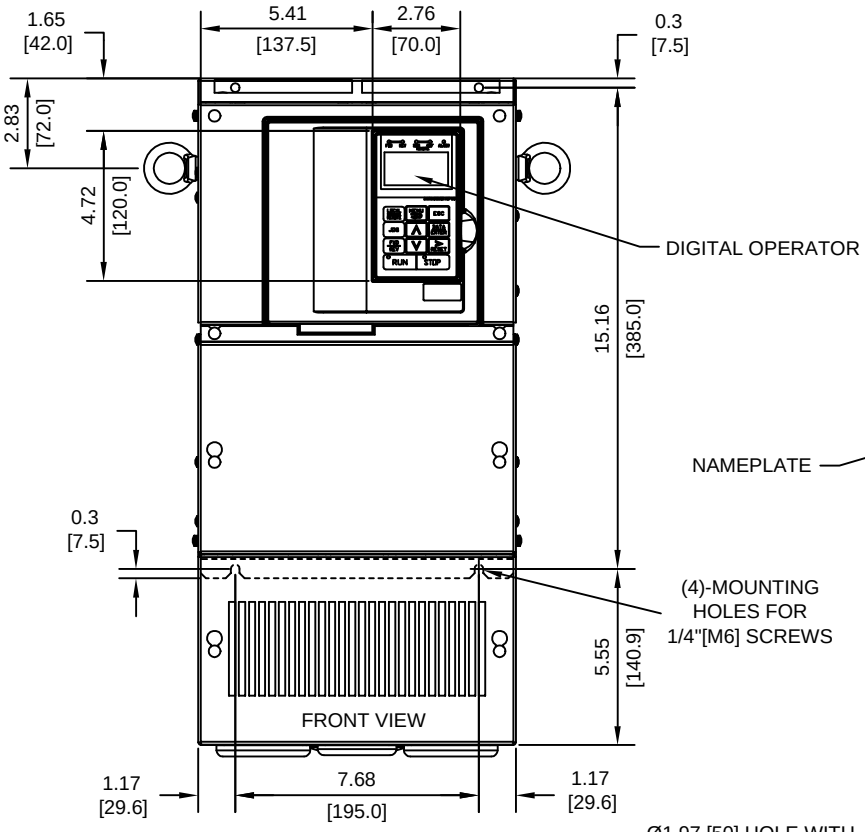

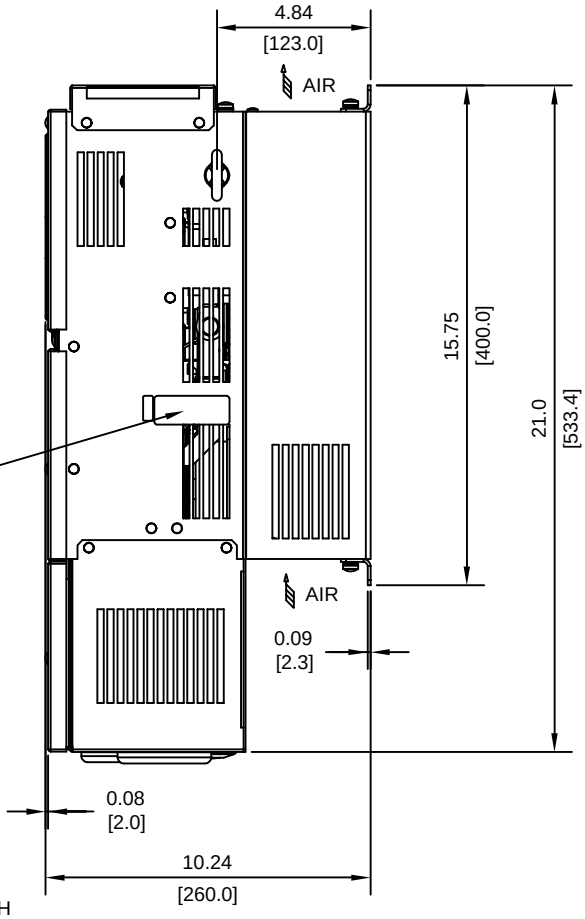

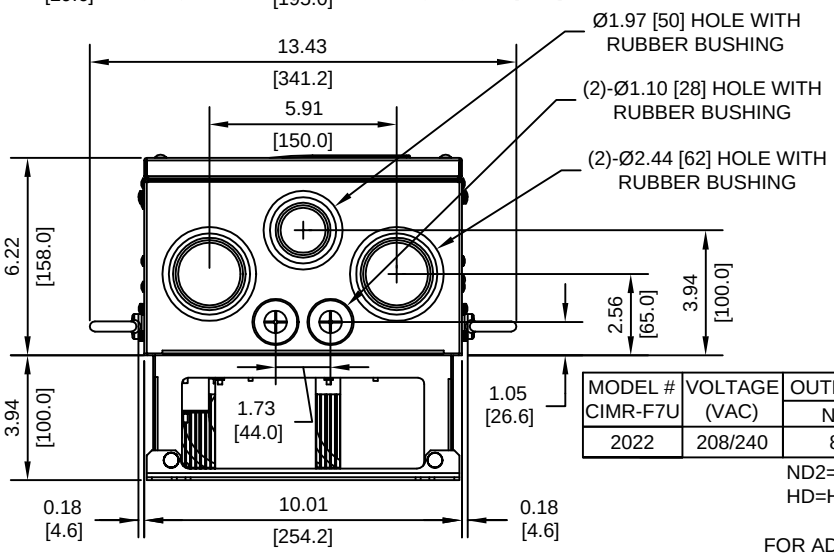

MODEL # CIMR-F7U	VOLTAGE (VAC)	OUTPUT CURRENT (A)		WEIGHT LBS (Kg)	HEAT LOSS (W)		
		ND2	HD		INT	EXT	TOTAL
2022	208/240	88	85	53 (24)	252	583	835

ND2=NORMAL DUTY 2
HD=HEAVY DUTY

INT=INTERNAL COMPONENTS
EXT=EXTERNAL HEATSINK

FOR ADDITIONAL DETAILS AND SPECIFICATIONS, CONSULT MANUAL

TOLERANCES/REFERENCES:
-
-
-
-
-
-

UNITS: IN[mm] | SCALE: 1:6

YASKAWA
A World of Automation Solutions™

YASKAWA ELECTRIC AMERICA, INC.
Corporate Headquarters
2121 Norman Drive South
Waukegan, IL 60085
1-800-YASKAWA
http://www.yaskawa.com

DRAWN: J. MATTAS	DATE 5-8-03	TITLE: F7 DIMENSION DRAWING FRAME SIZE 5 NEMA TYPE 1/IP20 ENCLOSURE F7U2022	
CHECKED: M. RUCINSKI	DATE 5-28-03		
TECH: J. CAIRO	DATE 5-13-03	SIZE A	REVISION A
APPROVED: T. SASADA	DATE 5-28-03		PAGE 1 of 2
ORIGINAL DESIGN: -	DATE -	DRAWING #: DD.F7.FR5.N1.01	

TERMINAL AND WIRING DETAILS (SCALE 1:6)

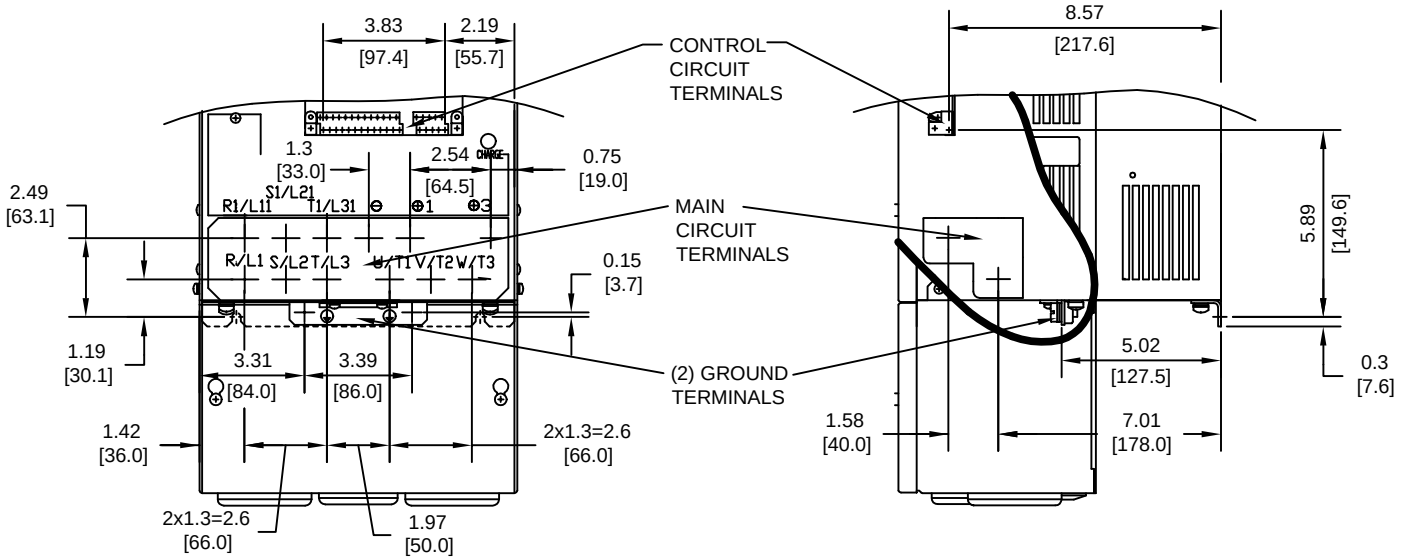

TERMINAL AND WIRE SPECIFICATIONS FOR MAIN CIRCUIT AND GROUND

MODEL # CIMR-F7U	TERMINAL SYMBOL	TERMINAL SCREW	CLAMPING TORQUE lb.in.(N.m.)	WIRE RANGE AWG(mm^2)
2022	R/L1, S/L2, T/L3, ⊖, ⊕1, R1/L11, S1/L21, T1/L31, U/T1, V/T2, W/T3,	M8	79.2 TO 88.0 (9.0 TO 10.0)	8-1/0 (8-60)
	⊕3	M6	35.2 TO 44.0 (4.0 TO 5.0)	8-4 (8-22)
	⏚	M8	79.2 TO 88.0 (9.0 TO 10.0)	SEE NOTE

NOTE: REFER TO APPLICABLE CODES FOR PROPER WIRE TYPE AND SIZE

MINIMUM INSTALLATION CLEARANCES (SCALE 1:10)

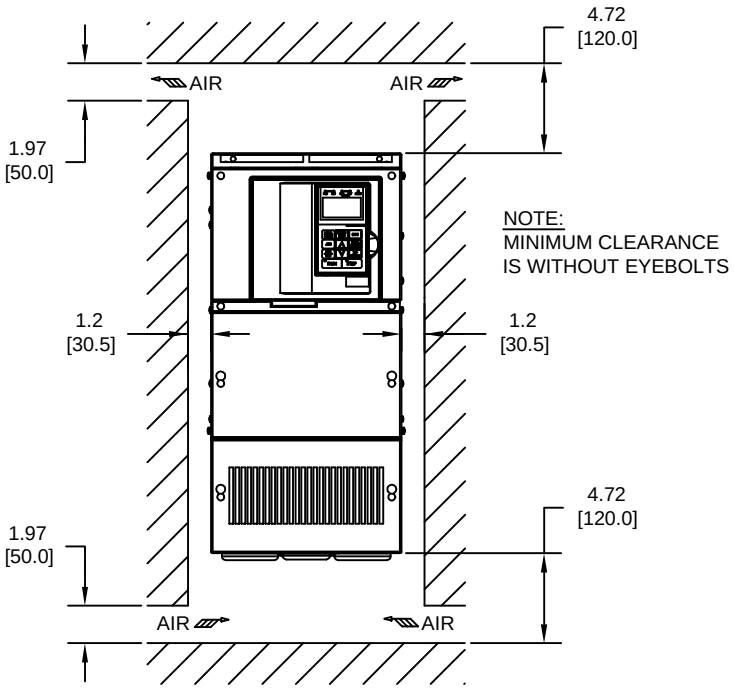

PANEL CUTOUT FOR EXTERNAL HEATSINK MOUNTING CONFIGURATION (SCALE 1:8)

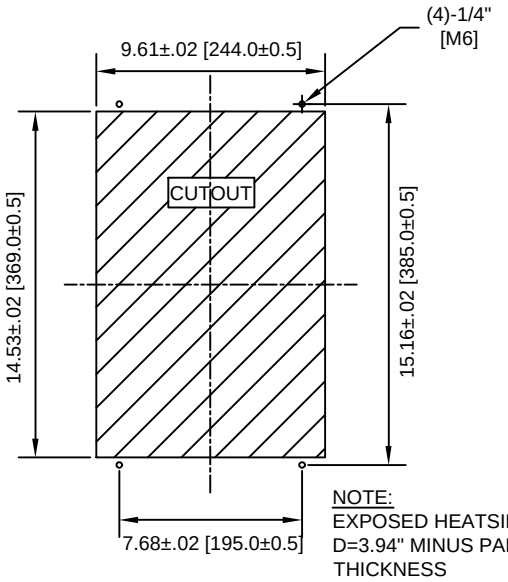

NOTE:
EXPOSED HEATSINK DEPTH D=3.94" MINUS PANEL THICKNESS

FOR ADDITIONAL DETAILS AND SPECIFICATIONS, CONSULT MANUAL

TOLERANCES/REFERENCES: - - - - - -	YASKAWA A World of Automation Solutions™	DRAWN: J. MATTAS	DATE 5-8-03	TITLE: F7 DIMENSION DRAWING FRAME SIZE 5 NEMA TYPE 1/IP20 ENCLOSURE F7U2022
	YASKAWA ELECTRIC AMERICA, INC. Corporate Headquarters 2121 Norman Drive South Waukegan, IL 60085 1-800-YASKAWA http://www.yaskawa.com	CHECKED: M. RUCINSKI	DATE 5-28-03	
		TECH: J. CAIRO	DATE 5-13-03	SIZE A / REVISION A / PAGE 2 of 2
UNITS: IN[mm]	SCALE: BY VIEW	APPROVED: T. SASADA	DATE 5-28-03	DRAWING #: DD.F7.FR5.N1.01
		ORIGINAL DESIGN: -	DATE -	