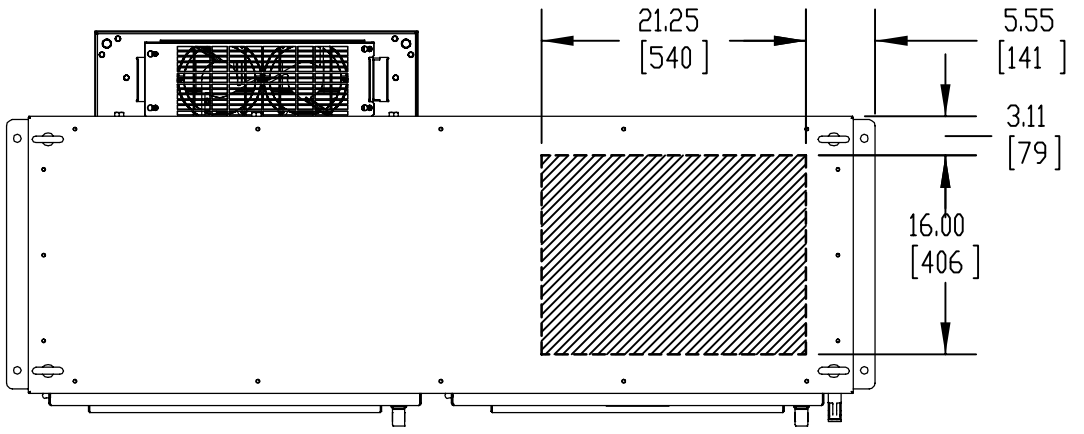

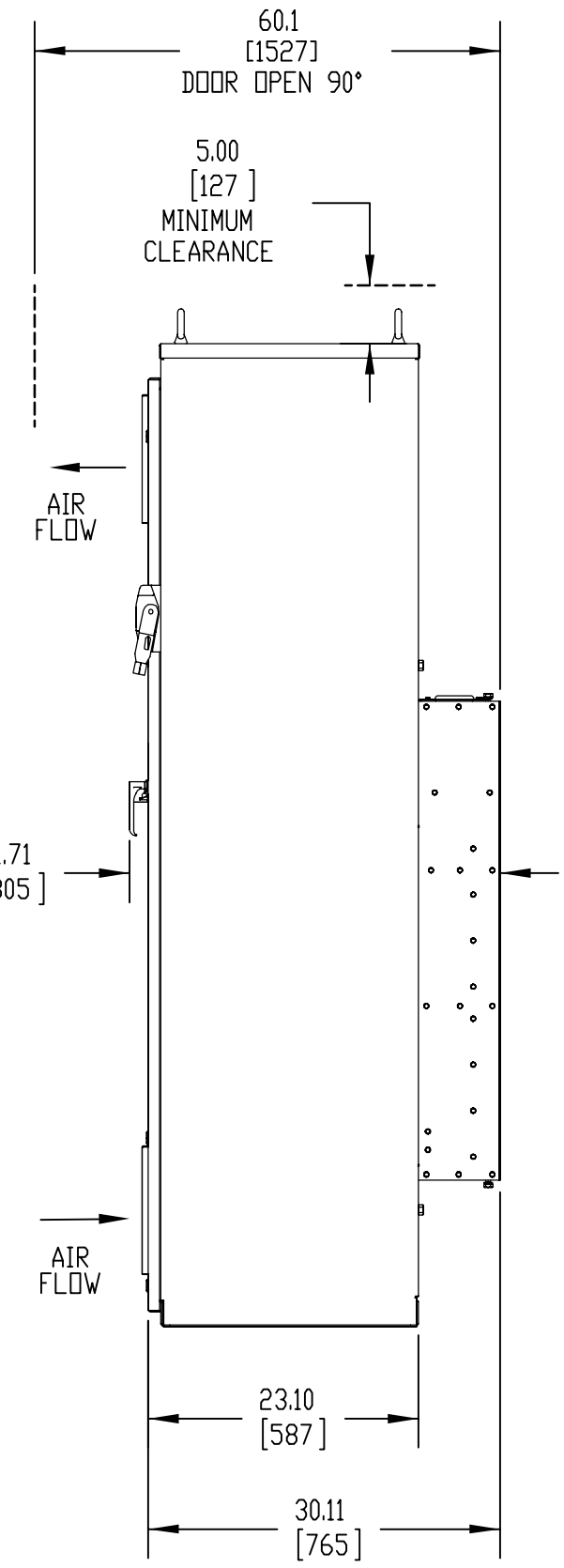

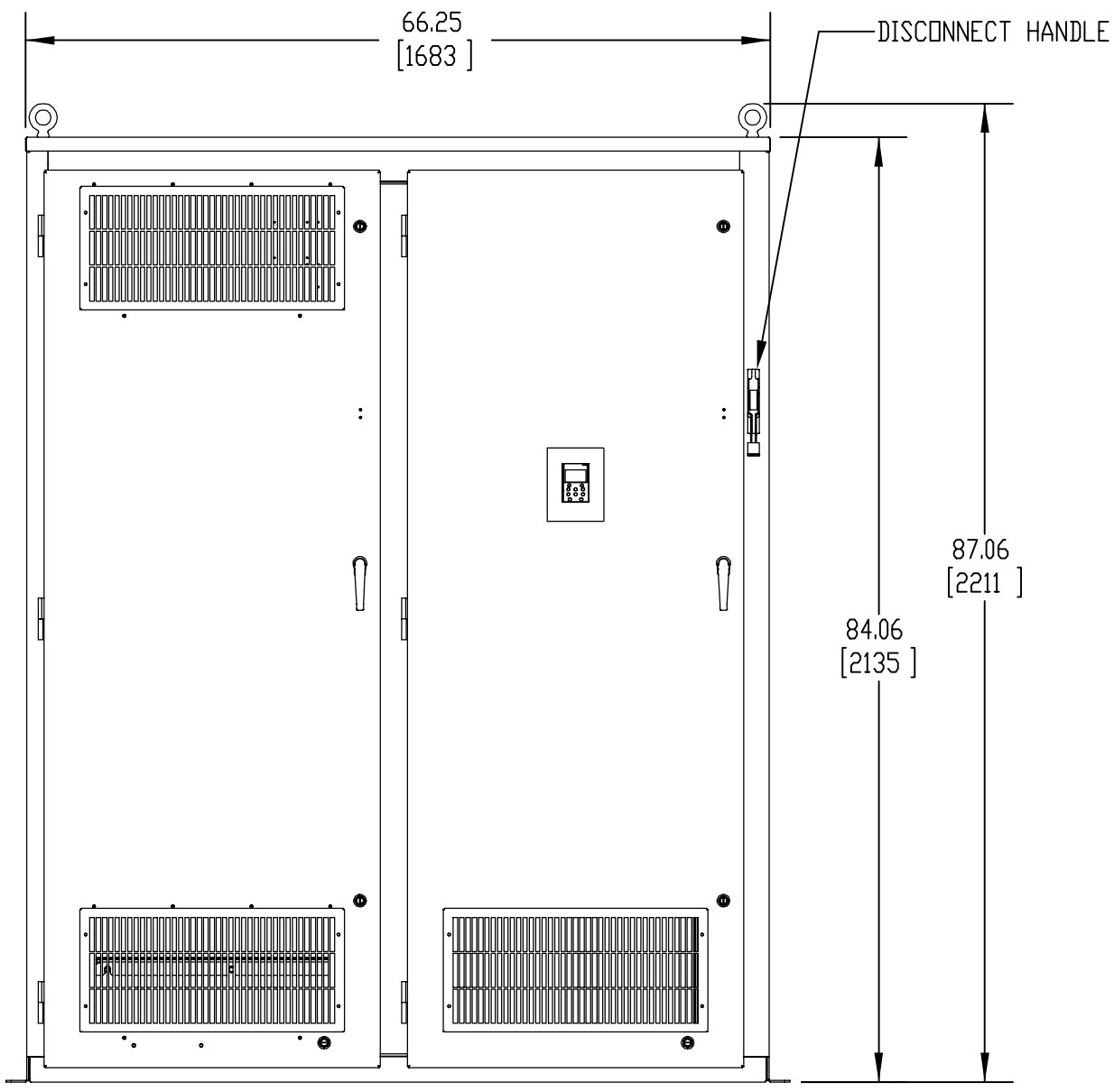

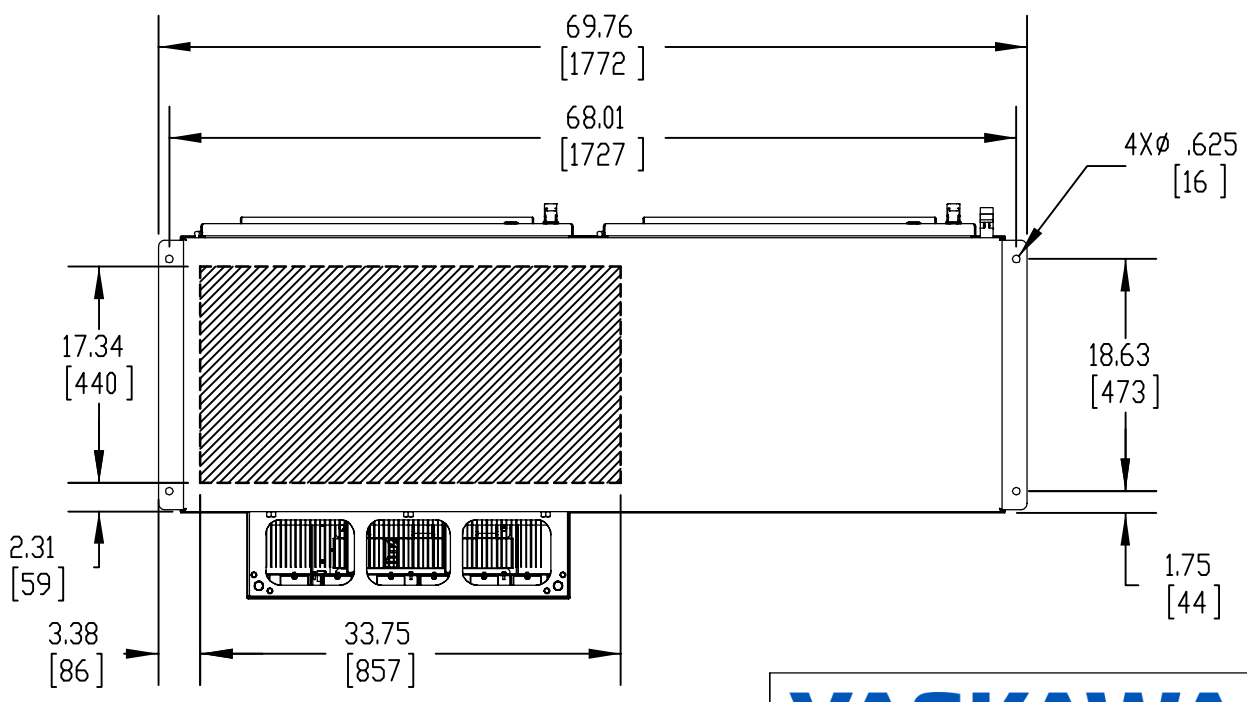

NOTES:

A. FOR REFERENCE ONLY UNLESS PROPERLY ENDORSED. FOR ADDITIONAL DETAILS AND SPECIFICATIONS, CONSULT FACTORY.
B. DIMENSIONS ARE IN INCHES [MILLIMETERS].
C. FANS, FILTERS, OR CLOSING PLATES ARE SUPPLIED WHEN OPTION MIX NESESSITATES.
D. USE APPROPRIATE TYPE RATED HUBS OR FITINGS TO MAINTAIN ENCLOSURE RATING.
E. HATCHED AREA INDICATES PERMISSIBLE CONDUIT ENTRANCE AREA.

YASKAWA

DRAWN: N. Laws	DATE 02/25/2021	TITLE: DIMENSION DRAWING, U1000, F2, TYPE 1
CHECKED: K. Malusic	DATE 03/01/2021	MATERIAL# ---
TECH: ,	DATE ,	SIZE A / REVISION 00 / PAGE 1 OF 1
APPROVED: R. Jensen	DATE 03/02/2021	DRAWING #: DD.U1E.1.F2.01
ORIGINAL DESIGN: N. Laws	DATE 02/25/2021	