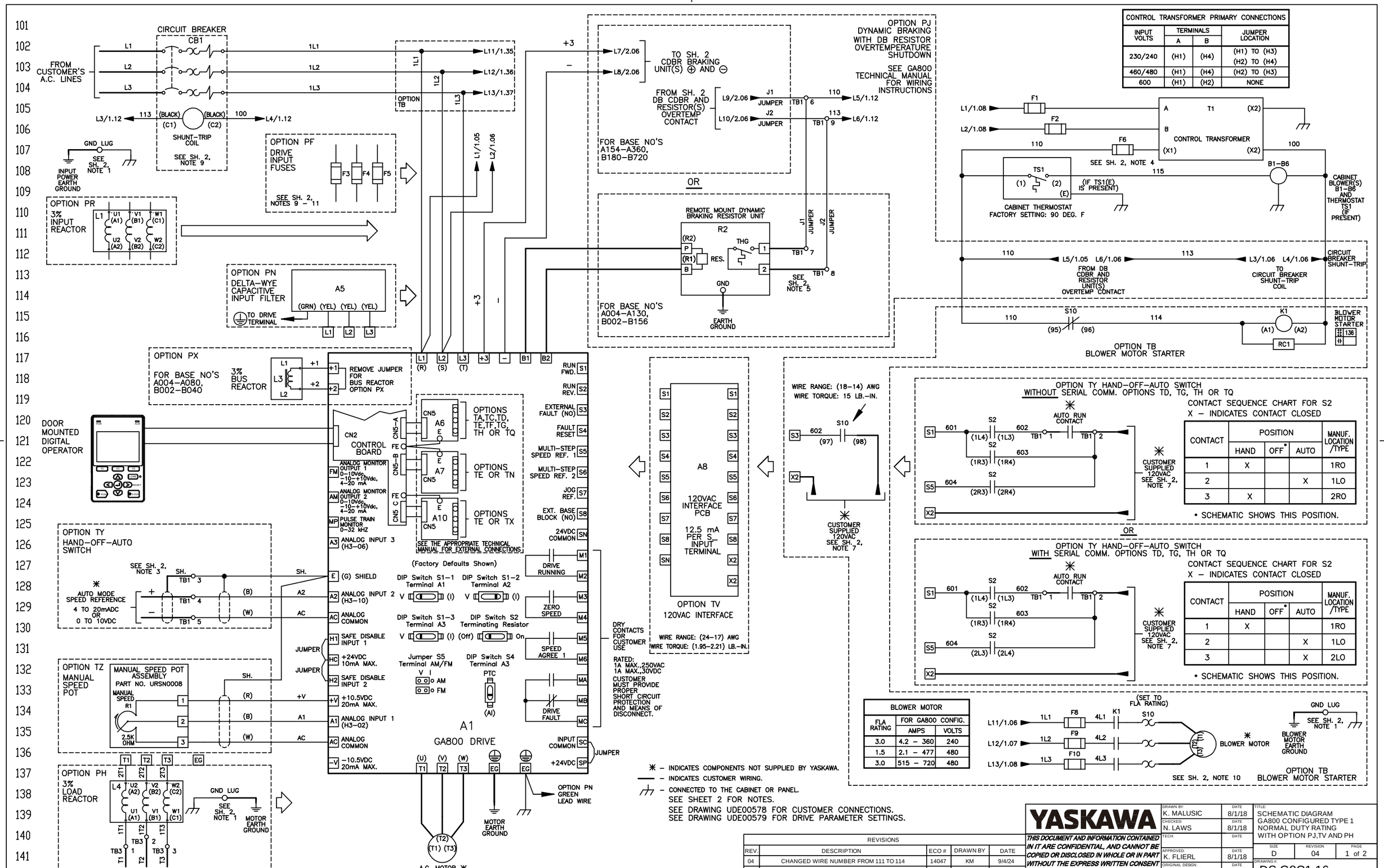
CIRCUIT BREAKER
CB1
FROM CUSTOMER'S A.C. LINES
L1
L2
L3
1L1
1L2
1L3
L11/1.35
L12/1.36
L13/1.37
OPTION TB
L3/1.12
113
(BLACK)
(C1)
(C2)
100
L4/1.12
SHUNT-TRIP COIL
SEE SH. 2, NOTE 9
GND LUG
SEE SH. 2, NOTE 1
INPUT POWER EARTH GROUND
OPTION PF
DRIVE INPUT FUSES
F3
F4
F5
SEE SH. 2, NOTES 9 - 11
L1/1.05
L2/1.06
OPTION PR
3% INPUT REACTOR
U1 (A1)
V1 (B1)
W1 (C1)
U2 (A2)
V2 (B2)
W2 (C2)
OPTION PN
DELTA-WYE CAPACITIVE INPUT FILTER
A5
(GRN) (YEL) (YEL) (YEL)
TO DRIVE TERMINAL
+3
-
OPTION PJ
DYNAMIC BRAKING WITH DB RESISTOR OVERTEMPERATURE SHUTDOWN
SEE GA800 TECHNICAL MANUAL FOR WIRING INSTRUCTIONS
L7/2.06
L8/2.06
TO SH. 2 CDBR BRAKING UNIT(S) ⊕ AND ⊖
FROM SH. 2 DB CDBR AND RESISTOR(S) OVERTEMP CONTACT
L9/2.06
L10/2.06
J1 JUMPER
J2 JUMPER
TB1 6
TB1 9
110
113
L5/1.12
L6/1.12
FOR BASE NO'S A154-A360, B180-B720
OR
REMOTE MOUNT DYNAMIC BRAKING RESISTOR UNIT
R2
(R2)
P
(R1)
B
RES.
THG
GND
EARTH GROUND
TB1 7
TB1 8
SEE SH. 2, NOTE 5
FOR BASE NO'S A004-A130, B002-B156
CONTROL TRANSFORMER PRIMARY CONNECTIONS
INPUT VOLTS
TERMINALS A B
JUMPER LOCATION
230/240 (H1) (H4) (H1) TO (H3) (H2) TO (H4)
460/480 (H1) (H4) (H2) TO (H3)
600 (H1) (H2) NONE
L1/1.08
L2/1.08
F1
F2
F6
T1
A
B
(X1)
(X2)
CONTROL TRANSFORMER
SEE SH. 2, NOTE 4
115
TS1
(1)
(2)
(E)
(IF TS1(E) IS PRESENT)
CABINET THERMOSTAT FACTORY SETTING: 90 DEG. F
B1-B6
CABINET BLOWER(S) B1-B6 AND THERMOSTAT TS1 (IF PRESENT)
L5/1.05 L6/1.06
FROM DB CDBR AND RESISTOR UNIT(S) OVERTEMP CONTACT
L3/1.06 L4/1.06
TO CIRCUIT BREAKER SHUNT-TRIP COIL
CIRCUIT BREAKER SHUNT-TRIP
S10
(95)
(96)
114
K1
(A1)
(A2)
RC1
BLOWER MOTOR STARTER
136
OPTION TB BLOWER MOTOR STARTER
OPTION PX
FOR BASE NO'S A004-A080, B002-B040
3% BUS REACTOR
L3
L2
+1
+2
REMOVE JUMPER FOR BUS REACTOR OPTION PX
L1 (R)
L2 (S)
L3 (T)
+3
-
B1
B2
RUN FWD. S1
RUN REV. S2
EXTERNAL FAULT (NO) S3
FAULT RESET S4
MULTI-STEP SPEED REF. 1 S5
MULTI-STEP SPEED REF. 2 S6
JOG REF. S7
EXT. BASE BLOCK (NO) S8
24VDC COMMON SN
DRIVE RUNNING M1 M2
ZERO SPEED M3 M4
SPEED AGREE 1 M5 M6
DRIVE FAULT MA MB MC
INPUT COMMON SC
+24VDC SP
JUMPER
DOOR MOUNTED DIGITAL OPERATOR
CN2
CONTROL BOARD
CN5-A
CN5-B
CN5 C
FE
A6
A7
A10
CN5
OPTIONS TA,TC,TD, TE,TF,TG, TH OR TQ
OPTIONS TE OR TN
OPTIONS TE OR TX
SEE THE APPROPRIATE TECHNICAL MANUAL FOR EXTERNAL CONNECTIONS.
FM ANALOG MONITOR OUTPUT 1 0-10Vdc, -10-+10Vdc, 4-20 mA
AM ANALOG MONITOR OUTPUT 2 0-10Vdc, -10-+10Vdc, 4-20 mA
MP PULSE TRAIN MONITOR 0-32 kHz
A3 ANALOG INPUT 3 (H3-06)
E (G) SHIELD
A2 ANALOG INPUT 2 (H3-10)
AC ANALOG COMMON
H1 SAFE DISABLE INPUT 1
HC +24VDC 10mA MAX.
H2 SAFE DISABLE INPUT 2
+V +10.5VDC 20mA MAX.
A1 ANALOG INPUT 1 (H3-02)
AC ANALOG COMMON
-V -10.5VDC 20mA MAX.
(Factory Defaults Shown)
DIP Switch S1-1 Terminal A1
DIP Switch S1-2 Terminal A2
DIP Switch S1-3 Terminal A3
DIP Switch S2 Terminating Resistor
Jumper S5 Terminal AM/FM
DIP Switch S4 Terminal A3
PTC
(AI)
AM
FM
JUMPER
A1
GA800 DRIVE
(U) (V) (W)
T1 T2 T3
EG
OPTION PN GREEN LEAD WIRE
MOTOR EARTH GROUND
(T2) (T1) (T3)
A.C. MOTOR ✳
DRY CONTACTS FOR CUSTOMER USE
RATED: 1A MAX.,250VAC 1A MAX.,30VDC
CUSTOMER MUST PROVIDE PROPER SHORT CIRCUIT PROTECTION AND MEANS OF DISCONNECT.
A8
120VAC INTERFACE PCB
12.5 mA PER S- INPUT TERMINAL
OPTION TV 120VAC INTERFACE
WIRE RANGE: (24-17) AWG
WIRE TORQUE: (1.95-2.21) LB.-IN.
WIRE RANGE: (18-14) AWG
WIRE TORQUE: 15 LB.-IN.
S3
602
(97)
(98)
X2
CUSTOMER SUPPLIED 120VAC SEE SH. 2, NOTE 7
OPTION TY HAND-OFF-AUTO SWITCH
WITHOUT SERIAL COMM. OPTIONS TD, TG, TH OR TQ
CONTACT SEQUENCE CHART FOR S2
X - INDICATES CONTACT CLOSED
AUTO RUN CONTACT
S1
601
S2
(1L4)
(1L3)
602
TB1 1
TB1 2
(1R3)
(1R4)
603
S5
604
(2R3)
(2R4)
CONTACT | POSITION HAND | OFF* | AUTO | MANUF. LOCATION /TYPE
1 | X | | | 1RO
2 | | | X | 1LO
3 | X | | | 2RO
• SCHEMATIC SHOWS THIS POSITION.
OR
OPTION TY HAND-OFF-AUTO SWITCH
WITH SERIAL COMM. OPTIONS TD, TG, TH OR TQ
(2L3)
(2L4)
CONTACT | POSITION HAND | OFF* | AUTO | MANUF. LOCATION /TYPE
1 | X | | | 1RO
2 | | | X | 1LO
3 | | | X | 2LO
• SCHEMATIC SHOWS THIS POSITION.
OPTION TY HAND-OFF-AUTO SWITCH
SEE SH. 2, NOTE 3
SH.
TB1 3
TB1 4
TB1 5
AUTO MODE SPEED REFERENCE 4 TO 20mADC OR 0 TO 10VDC
(B)
(W)
A2
AC
OPTION TZ MANUAL SPEED POT
MANUAL SPEED POT ASSEMBLY PART NO. URSN0008
MANUAL SPEED R1
2.5K OHM
(R)
+V
A1
OPTION PH 3% LOAD REACTOR
L4
2T1
2T2
2T3
1T1
1T2
1T3
TB3
GND LUG
SEE SH. 2, NOTE 1
MOTOR EARTH GROUND
BLOWER MOTOR
(SET TO FLA RATING)
F8
F9
F10
4L1
4L2
4L3
L11/1.06
L12/1.07
L13/1.08
SEE SH. 2, NOTE 10
BLOWER MOTOR EARTH GROUND
OPTION TB BLOWER MOTOR STARTER
BLOWER MOTOR
FLA RATING | FOR GA800 CONFIG. AMPS | VOLTS
3.0 | 4.2 - 360 | 240
1.5 | 2.1 - 477 | 480
3.0 | 515 - 720 | 480
✳ - INDICATES COMPONENTS NOT SUPPLIED BY YASKAWA.
— - INDICATES CUSTOMER WIRING.
- CONNECTED TO THE CABINET OR PANEL.
SEE SHEET 2 FOR NOTES.
SEE DRAWING UDE00578 FOR CUSTOMER CONNECTIONS.
SEE DRAWING UDE00579 FOR DRIVE PARAMETER SETTINGS.
REVISIONS
REV. | DESCRIPTION | ECO # | DRAWN BY | DATE
04 | CHANGED WIRE NUMBER FROM 111 TO 114 | 14047 | KM | 9/4/24
03 | ADDED INPUT FUSES TO B361-B720, NOTE 11 | 11302 | KM | 4/13/21
YASKAWA
THIS DOCUMENT AND INFORMATION CONTAINED IN IT ARE CONFIDENTIAL, AND CANNOT BE COPIED OR DISCLOSED IN WHOLE OR IN PART WITHOUT THE EXPRESS WRITTEN CONSENT OF YASKAWA AMERICA INC.
DRAWN BY: K. MALUSIC DATE 8/1/18
CHECKED: N. LAWS DATE 8/1/18
TECH: DATE
APPROVED: K. FLIERL DATE 8/1/18
ORIGINAL DESIGN: K. MALUSIC DATE 8/1/18
TITLE: SCHEMATIC DIAGRAM GA800 CONFIGURED TYPE 1 NORMAL DUTY RATING WITH OPTION PJ,TV AND PH
SIZE D
REVISION 04
PAGE 1 of 2
DRAWING #: DS.G8C1.16

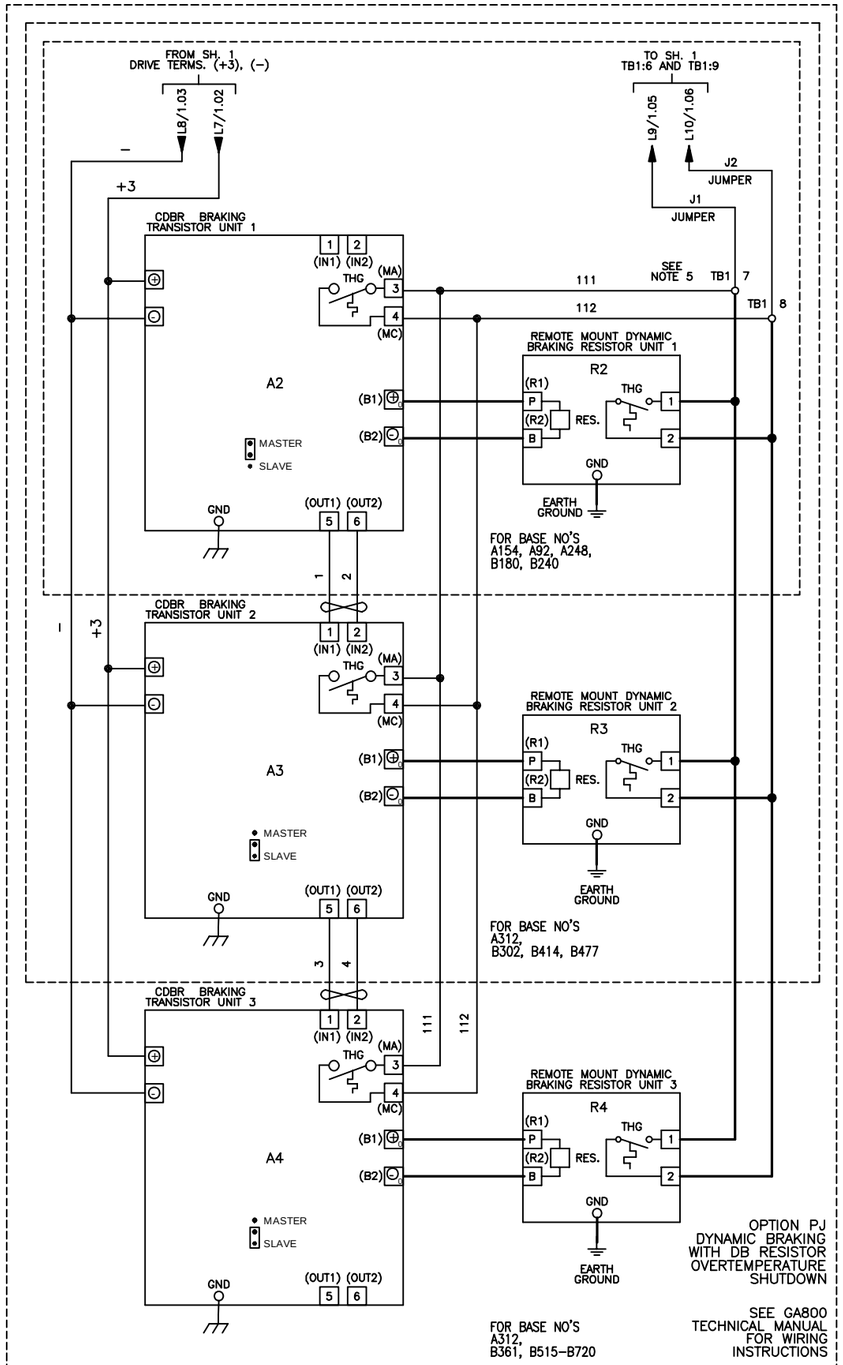

NOTES:

1. CONNECTED TO THE CABINET. CUSTOMER TO CONNECT THE CABINET GROUND LUG TO EARTH GROUND.
2. CONDUIT FITTINGS/HUBS SHALL COMPLY WITH THE 'STANDARD FOR CONDUIT, TUBING, AND CABLE FITTINGS, UL 514B'. OR CONDUIT FITTINGS HAVING THE SAME ENVIRONMENTAL RATING AS THE ENCLOSURE SHALL BE USED.
3. INSULATED TWISTED SHIELDED WIRE IS REQUIRED. SHIELD TO CONNECT TO PROPER TERMINALS AS SHOWN. CONNECT THE SHIELD ONLY AT THIS END. STUB AND ISOLATE THE OTHER END. DO NOT RUN THESE WIRES IN THE SAME CONDUIT AS THE AC POWER AND AC CONTROL WIRES. KEEP ALL WIRING UNDER 50m IN LENGTH.
4. FOR A CONTROL TRANSFORMER T1 POWER RATING OF 350VA OR GREATER, SECONDARY FUSE F6 IS ADDED.
5. CUSTOMER TO CONNECT NORMALLY OPEN BRAKING RESISTOR THERMAL SWITCHES PER THE GA800 TECHNICAL MANUAL IN PARALLEL WITH TB1–7 AND TB1–8.
6. IF AC MOTOR IS FURNISHED WITH A N.C. THERMAL SWITCH THEN SET DRIVE PARAMETER H1–08 TO 27. THIS WILL CAUSE THE DRIVE TO COAST TO STOP UPON A AC MOTOR THERMAL FAULT. ALONG WITH THIS, ADD THE FOLLOWING CUSTOMER WIRING: WIRE THE N.C. THERMAL SWITCH BETWEEN TERMINAL S8 OF THE 120VAC INTERFACE CARD AND ONE SIDE OF THE 120VAC SOURCE.
7. CUSTOMER MUST PROVIDE PROPER SHORT CIRCUIT PROTECTION AND MEANS OF DISCONNECT.
8. <u>OPTIONS TC, TD, TG, TH OR TQ CONTROL (SEE UDE00579 FOR MORE INFORMATION):</u>

   OPTION TC = PROFINET
   OPTION TD = ETHERNET/IP
   OPTION TG = DEVICENET
   OPTION TH = PROFIBUS
   OPTION TQ = ETHERNET MODBUS TCP/IP
9. DRIVE INPUT FUSES F3, F4, F5 ARE INCLUDED WITH OPTION PE, PC, PM OR PJ FOR BASE NUMBERS B007–B302.
10. DRIVE INPUT FUSES F3, F4, F5 ARE INCLUDED WITH OPTION TB FOR BASE NUMBERS A004–A009 AND B002–B007.
11. DRIVE INPUT FUSES F3, F4, F5 ARE INCLUDED FOR BASE NUMBERS B361–B720.

YASKAWA	DRAWN BY: K. MALUSIC	DATE 8/1/18	TITLE: SCHEMATIC DIAGRAM GA800 CONFIGURED TYPE 1 NORMAL DUTY RATING WITH OPTION PJ,TV AND PH
	CHECKED: N. LAWS	DATE 8/1/18	
THIS DOCUMENT AND INFORMATION CONTAINED IN IT ARE CONFIDENTIAL, AND CANNOT BE COPIED OR DISCLOSED IN WHOLE OR IN PART WITHOUT THE EXPRESS WRITTEN CONSENT OF YASKAWA AMERICA INC.	TECH:	DATE	SIZE D / REVISION 04 / PAGE 2 of 2
	APPROVED: K. FLIERL	DATE 8/1/18	
	ORIGINAL DESIGN: K. MALUSIC	DATE 8/1/18	DRAWING #: DS.G8C1.16