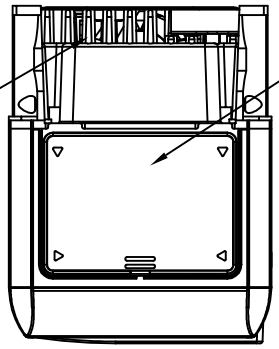

NOTE:
PROTECTIVE COVERS ARE FACTORY INSTALLED TO THE TOP AND BOTTOM OF THE DRIVE TO MEET IP20 & NEMA TYPE 1 REQUIREMENTS, RESULTING IN AN AMBIENT TEMPERATURE RATING OF 104F(40C). REMOVE THESE COVERS WHEN OPERATING THE DRIVE WITHIN A PANEL TO OBTAIN THE MAXIMUM SURROUNDING AIR TEMPERATURE RATING OF 113F(45C). REMOVING THESE COVERS RESULTS IN AN ENCLOSURE RATING OF IP00.

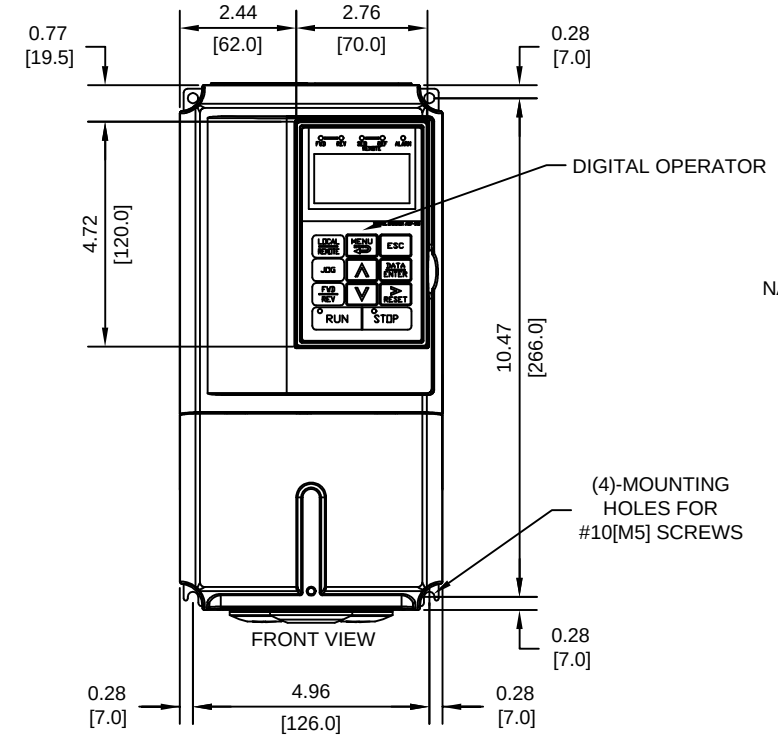

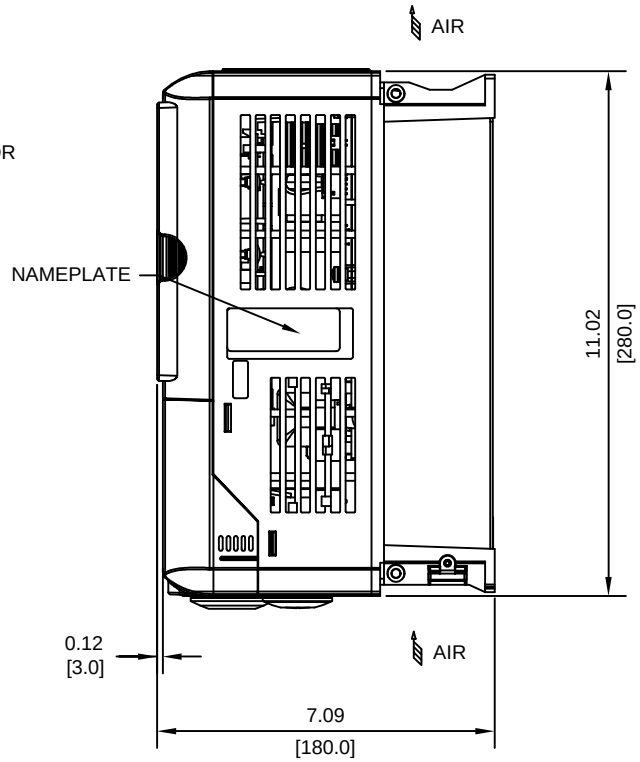

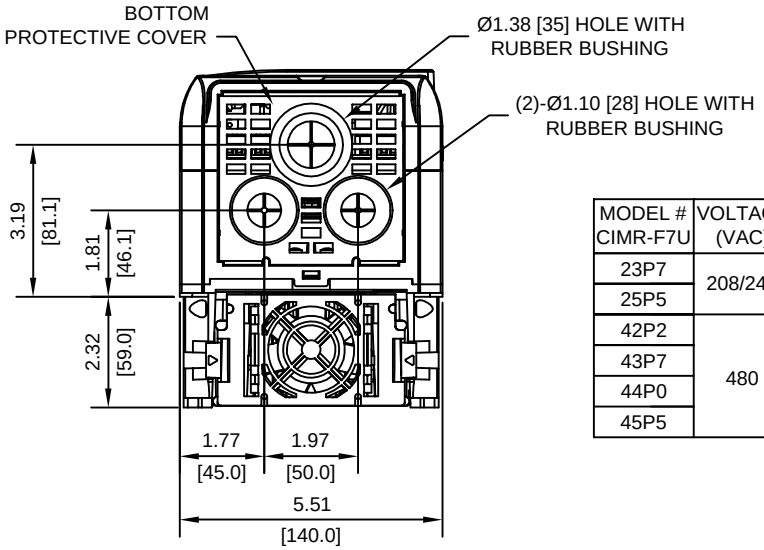

MODEL # CIMR-F7U	VOLTAGE (VAC)	OUTPUT CURRENT (A)		WEIGHT LBS (Kg)	HEAT LOSS (W)		
		ND2	HD		INT	EXT	TOTAL
23P7	208/240	16.8	15.0	8.8 (4.0)	74	110	184
25P5		23.0	23.0	8.8 (4.0)	84	164	248
42P2	480	5.3	5.3	8.8 (4.0)	56	59	115
43P7		7.6	7.6	8.8 (4.0)	68	80	149
44P0		8.7	8.7	8.8 (4.0)	70	90	160
45P5		12.5	12.5	8.8 (4.0)	82	127	209

ND2=NORMAL DUTY 2
HD=HEAVY DUTY

INT=INTERNAL COMPONENTS
EXT=EXTERNAL HEATSINK

FOR ADDITIONAL DETAILS AND SPECIFICATIONS, CONSULT MANUAL

TOLERANCES/REFERENCES: - - - - - -

UNITS: IN[mm] SCALE: 1:4

YASKAWA
A World of Automation Solutions™

YASKAWA ELECTRIC AMERICA, INC.
Corporate Headquarters
2121 Norman Drive South
Waukegan, IL 60085
1-800-YASKAWA
http://www.yaskawa.com

DRAWN: J. MATTAS	DATE 4-17-03	TITLE: F7 DIMENSION DRAWING FRAME SIZE 2 NEMA TYPE 1/IP20 AND IP00 F7U23P7 TO 25P5, 42P2 TO 45P5
CHECKED: M. RUCINSKI	DATE 5-13-03	
TECH: J. CAIRO	DATE 4-29-03	SIZE A / REVISION A / PAGE 1 of 3
APPROVED: T. SASADA	DATE 5-13-03	
ORIGINAL DESIGN: -	DATE -	DRAWING #: DD.F7.FR2.N1.01

TERMINAL AND WIRING DETAILS (SCALE 1:3)

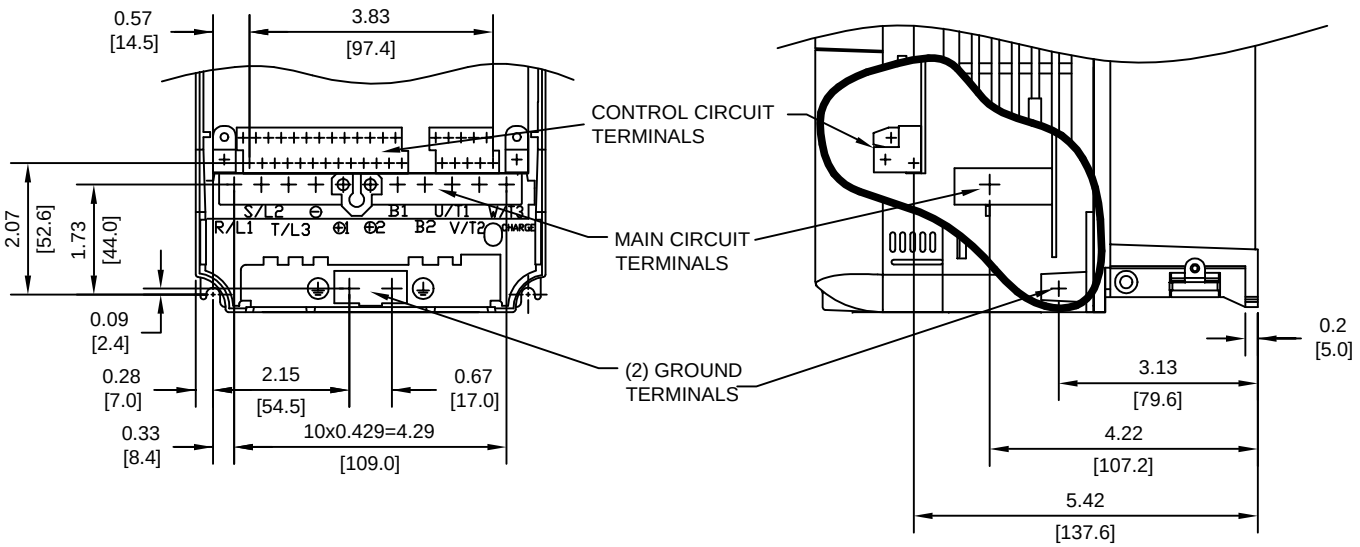

TERMINAL AND WIRE SPECIFICATIONS FOR
MAIN CIRCUIT AND GROUND

MODEL # CIMR-F7U	TERMINAL SYMBOL	TERMINAL SCREW	CLAMPING TORQUE lb.in.(N.m.)	WIRE RANGE AWG(mm^2)
23P7	R/L1, S/L2, T/L3, ⊖, ⊕1, ⊕2, B1, B2, U/T1, V/T2, W/T3, ⏚	M4	10.6 TO 13.2 (1.2 TO 1.5)	18-10 (0.82-5.5)
25P5	R/L1, S/L2, T/L3, ⊖, ⊕1, ⊕2, B1, B2, U/T1, V/T2, W/T3, ⏚	M4	10.6 TO 13.2 (1.2 TO 1.5)	18-10 (0.82-5.5)
42P2	R/L1, S/L2, T/L3, ⊖, ⊕1, ⊕2, B1, B2, U/T1, V/T2, W/T3, ⏚	M4	10.6 TO 13.2 (1.2 TO 1.5)	18-10 (0.82-5.5)
43P7	R/L1, S/L2, T/L3, ⊖, ⊕1, ⊕2, B1, B2, U/T1, V/T2, W/T3, ⏚	M4	10.6 TO 13.2 (1.2 TO 1.5)	18-10 (0.82-5.5)
44P0	R/L1, S/L2, T/L3, ⊖, ⊕1, ⊕2, B1, B2, U/T1, V/T2, W/T3, ⏚	M4	10.6 TO 13.2 (1.2 TO 1.5)	18-10 (0.82-5.5)
45P5	R/L1, S/L2, T/L3, ⊖, ⊕1, ⊕2, B1, B2, U/T1, V/T2, W/T3, ⏚	M4	10.6 TO 13.2 (1.2 TO 1.5)	18-10 (0.82-5.5)

NOTE: REFER TO APPLICABLE CODES FOR PROPER WIRE TYPE AND SIZE

FOR ADDITIONAL DETAILS AND SPECIFICATIONS, CONSULT MANUAL

TOLERANCES/REFERENCES: - - - - - -	YASKAWA A World of Automation Solutions™	DRAWN: J. MATTAS	DATE 4-17-03	TITLE: F7 DIMENSION DRAWING FRAME SIZE 2 NEMA TYPE 1/IP20 AND IP00 F7U23P7 TO 25P5, 42P2 TO 45P5
	YASKAWA ELECTRIC AMERICA, INC. Corporate Headquarters 2121 Norman Drive South Waukegan, IL 60085 1-800-YASKAWA http://www.yaskawa.com	CHECKED: M. RUCINSKI	DATE 5-13-03	
		TECH: J. CAIRO	DATE 4-29-03	SIZE A / REVISION A / PAGE 2 of 3
		APPROVED: T. SASADA	DATE 5-13-03	
UNITS: IN[mm] / SCALE: BY VIEW		ORIGINAL DESIGN: -	DATE -	DRAWING #: DD.F7.FR2.N1.01

MINIMUM INSTALLATION CLEARANCES (SCALE 1:6)

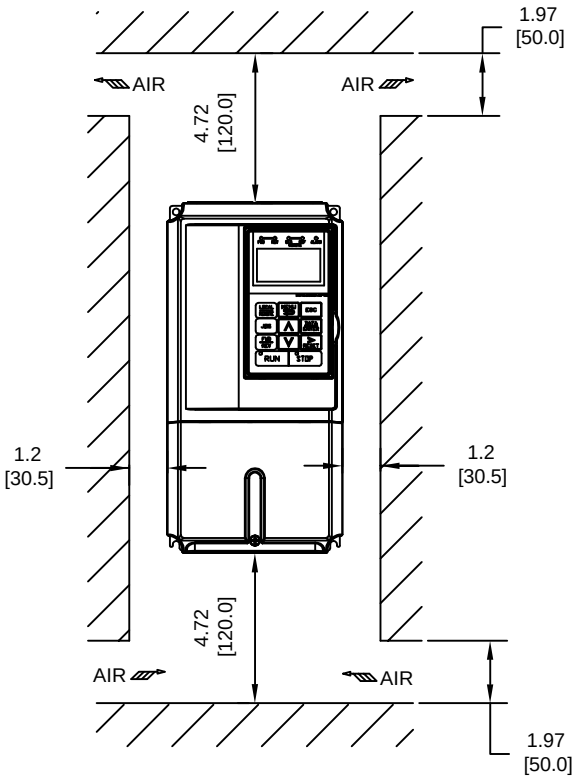

PANEL CUTOUT FOR EXTERNAL HEATSINK MOUNTING CONFIGURATION (SCALE 1:6)

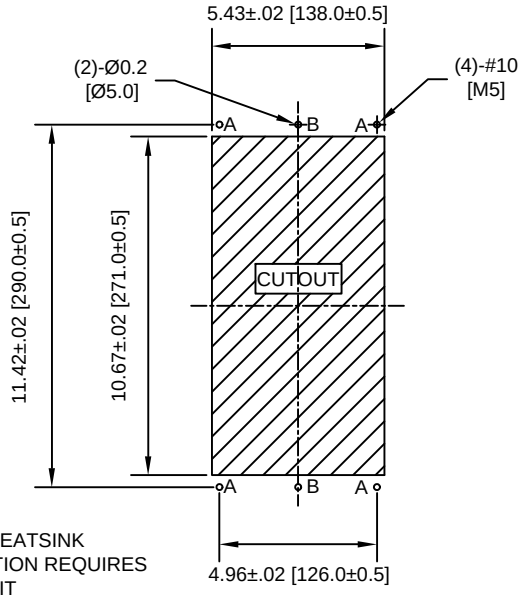

SIMPLIFIED REAR VIEW (SCALE 1:6)

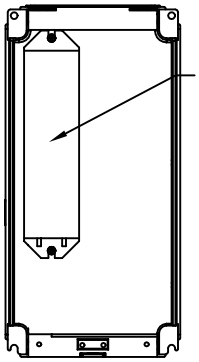

OPTIONAL
DYNAMIC BRAKING RESISTOR
MOUNTING HARDWARE:
(2)-M4x10 SCREWS

NOTES:
1. EXTERNAL HEATSINK CONFIGURATION REQUIRES MOUNTING KIT
2. EXPOSED HEATSINK DEPTH D=2.32" MINUS PANEL THICKNESS

FOR ADDITIONAL DETAILS AND SPECIFICATIONS, CONSULT MANUAL

TOLERANCES/REFERENCES: - - - - - -	YASKAWA A World of Automation Solutions™	DRAWN: J. MATTAS	DATE 4-17-03	TITLE: F7 DIMENSION DRAWING FRAME SIZE 2 NEMA TYPE 1/IP20 AND IP00 F7U23P7 TO 25P5, 42P2 TO 45P5
	YASKAWA ELECTRIC AMERICA, INC. Corporate Headquarters 2121 Norman Drive South Waukegan, IL 60085 1-800-YASKAWA http://www.yaskawa.com	CHECKED: M. RUCINSKI	DATE 5-13-03	
		TECH: J. CAIRO	DATE 4-29-03	SIZE A / REVISION A / PAGE 3 of 3
		APPROVED: T. SASADA	DATE 5-13-03	
UNITS: IN[mm] / SCALE: BY VIEW		ORIGINAL DESIGN: -	DATE -	DRAWING #: DD.F7.FR2.N1.01