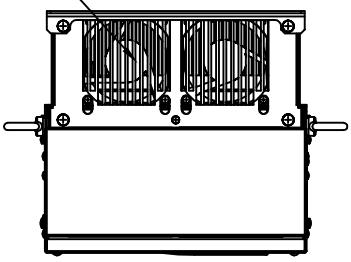

LIFTING AND EYEBOLT DETAILS

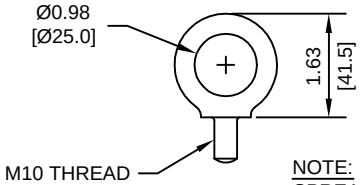

NOTE:
SPREADER BAR REQUIRED TO
AVOID DAMAGE DURING LIFTING

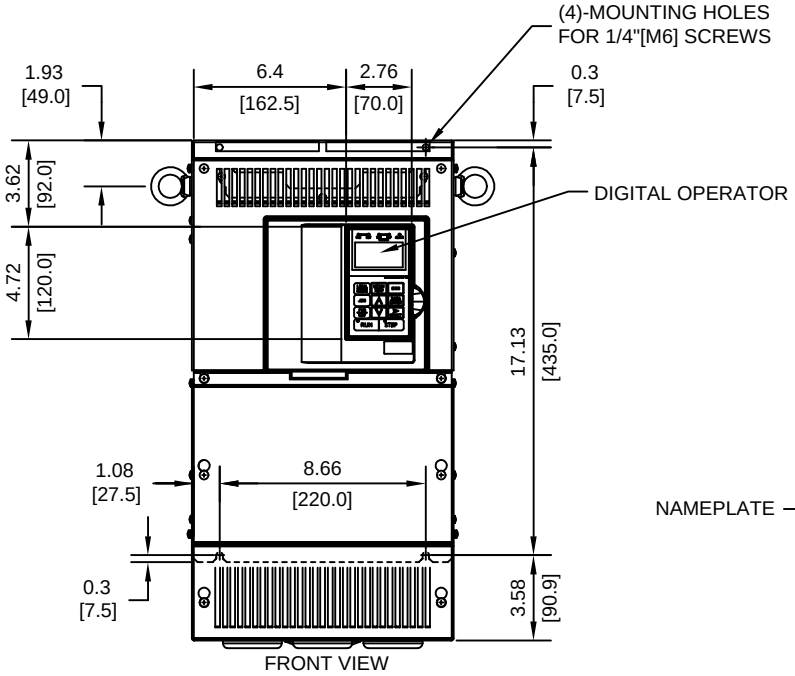

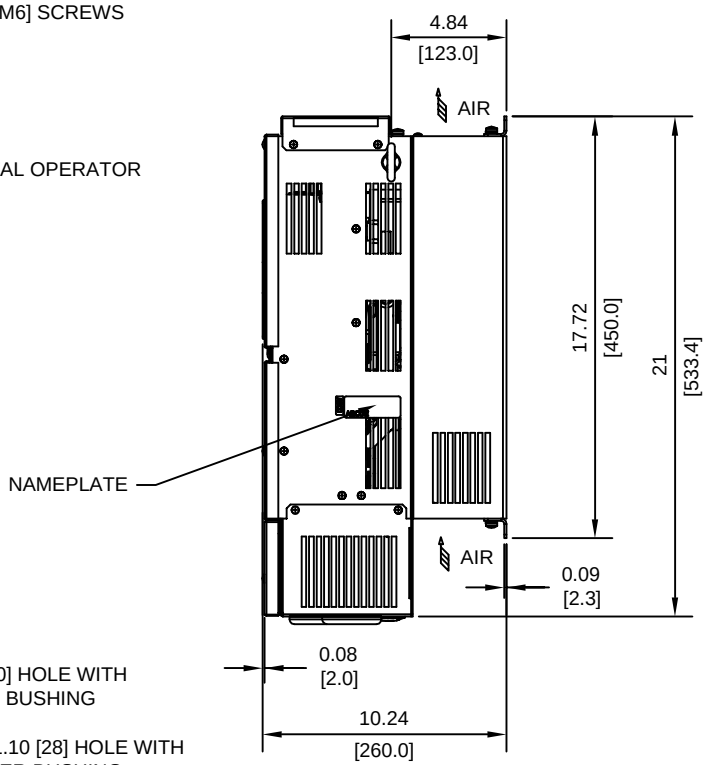

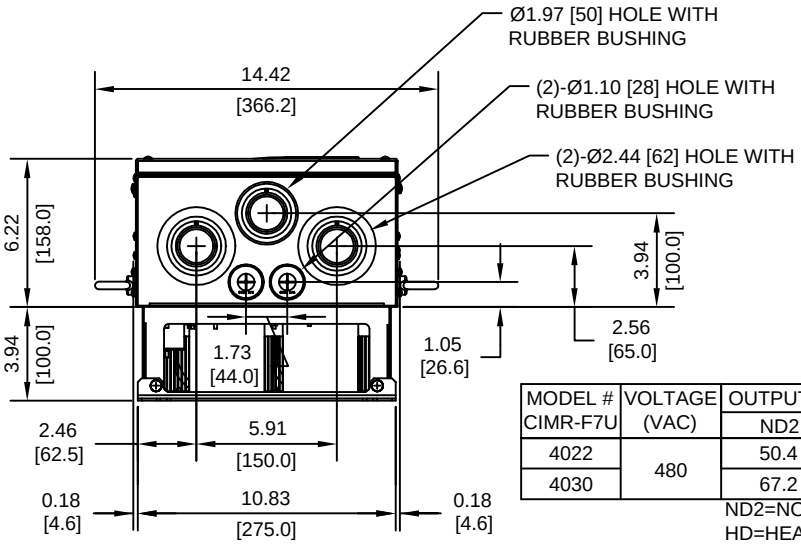

MODEL # CIMR-F7U	VOLTAGE (VAC)	OUTPUT CURRENT (A)		WEIGHT LBS (Kg)	HEAT LOSS (W)		
		ND2	HD		INT	EXT	TOTAL
4022	480	50.4	45	53 (24)	233	420	653
4030		67.2	60	53 (24)	298	691	989

ND2=NORMAL DUTY 2
HD=HEAVY DUTY

INT=INTERNAL COMPONENTS
EXT=EXTERNAL HEATSINK

FOR ADDITIONAL DETAILS AND SPECIFICATIONS, CONSULT MANUAL

TOLERANCES/REFERENCES: - - - - - -	YASKAWA A World of Automation Solutions™	DRAWN: J. MATTAS	DATE 5-19-03	TITLE: F7 DIMENSION DRAWING FRAME SIZE 6B NEMA TYPE 1/IP20 ENCLOSURE F7U4022, 4030
	YASKAWA ELECTRIC AMERICA, INC. Corporate Headquarters 2121 Norman Drive South Waukegan, IL 60085 1-800-YASKAWA http://www.yaskawa.com	CHECKED: M. RUCINSKI	DATE 6-16-03	
		TECH: J. CAIRO	DATE 5-22-03	SIZE A / REVISION A / PAGE 1 of 3
		APPROVED: T. SASADA	DATE 6-16-03	
UNITS: IN[mm] / SCALE: 1:8		ORIGINAL DESIGN: -	DATE -	DRAWING #: DD.F7.FR6B.N1.01

TERMINAL AND WIRING DETAILS (SCALE 1:6)

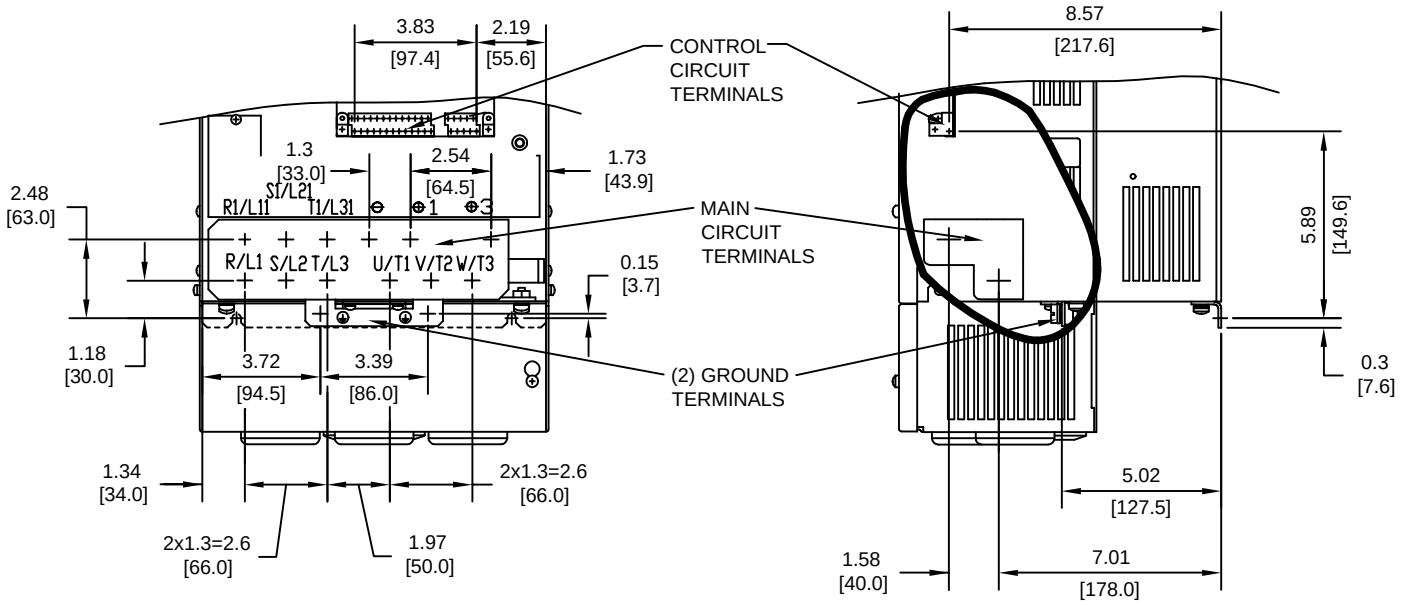

TERMINAL AND WIRE SPECIFICATIONS FOR
MAIN CIRCUIT AND GROUND

MODEL # CIMR-F7U	TERMINAL SYMBOL	TERMINAL SCREW	CLAMPING TORQUE lb.in.(N.m.)	WIRE RANGE AWG(mm^2)
4022	R/L1, S/L2, T/L3, ⊖, ⊕1, R1/L11, S1/L21, T1/L31, U/T1, V/T2, W/T3,	M6	35.2 TO 44.0 (4.0 TO 5.0)	12-3 (3.5-30)
	⊕3	M6	35.2 TO 44.0 (4.0 TO 5.0)	12-8 (3.5-8)
	⏚	M8	79.2 TO 88.0 (9.0 TO 10.0)	SEE NOTE
4030	R/L1, S/L2, T/L3, ⊖, ⊕1, R1/L11, S1/L21, T1/L31, U/T1, V/T2, W/T3,	M6	35.2 TO 44.0 (4.0 TO 5.0)	12-3 (3.5-30)
	⊕3	M6	35.2 TO 44.0 (4.0 TO 5.0)	12-8 (3.5-8)
	⏚	M8	79.2 TO 88.0 (9.0 TO 10.0)	SEE NOTE

NOTE: REFER TO APPLICABLE CODES FOR PROPER WIRE TYPE AND SIZE

FOR ADDITIONAL DETAILS AND SPECIFICATIONS, CONSULT MANUAL

TOLERANCES/REFERENCES:
-
-
-
-
-
-

UNITS: IN[mm] | SCALE: BY VIEW

YASKAWA
A World of Automation Solutions™

YASKAWA ELECTRIC AMERICA, INC.
Corporate Headquarters
2121 Norman Drive South
Waukegan, IL 60085
1-800-YASKAWA
http://www.yaskawa.com

DRAWN: J. MATTAS	DATE 5-19-03	TITLE: F7 DIMENSION DRAWING FRAME SIZE 6B NEMA TYPE 1/IP20 ENCLOSURE F7U4022, 4030
CHECKED: M. RUCINSKI	DATE 6-16-03	
TECH: J. CAIRO	DATE 5-22-03	SIZE A / REVISION A / PAGE 2 of 3
APPROVED: T. SASADA	DATE 6-16-03	
ORIGINAL DESIGN: -	DATE -	DRAWING #: DD.F7.FR6B.N1.01

MINIMUM INSTALLATION CLEARANCES (SCALE 1:10)

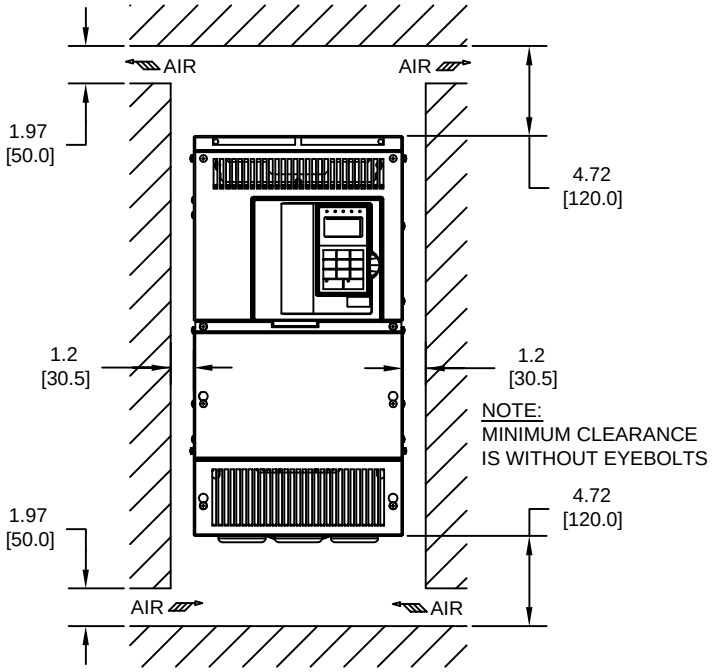

PANEL CUTOUT FOR EXTERNAL HEATSINK
MOUNTING CONFIGURATION (SCALE 1:8)

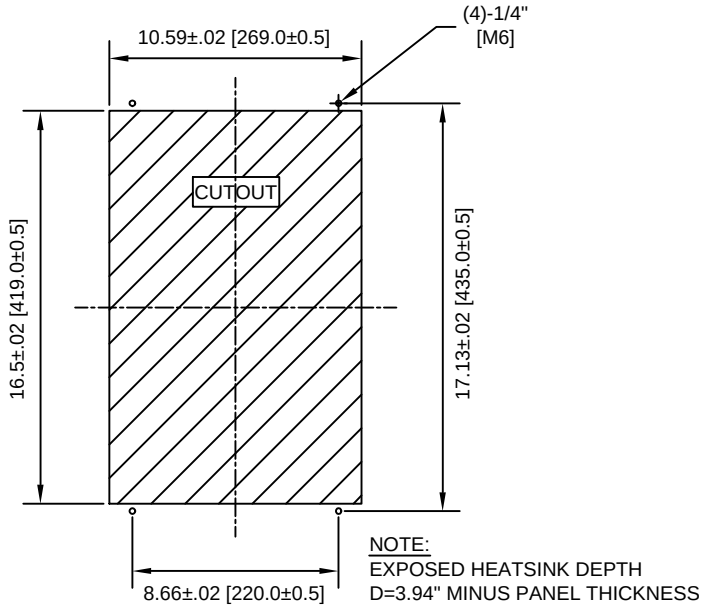

FOR ADDITIONAL DETAILS AND SPECIFICATIONS, CONSULT MANUAL

TOLERANCES/REFERENCES: - - - - - -	YASKAWA A World of Automation Solutions™	DRAWN: J. MATTAS	DATE 5-19-03	TITLE: F7 DIMENSION DRAWING FRAME SIZE 6B NEMA TYPE 1/IP20 ENCLOSURE F7U4022, 4030	
	YASKAWA ELECTRIC AMERICA, INC. Corporate Headquarters 2121 Norman Drive South Waukegan, IL 60085 1-800-YASKAWA http://www.yaskawa.com	CHECKED: M. RUCINSKI	DATE 6-16-03		
		TECH: J. CAIRO	DATE 5-22-03	SIZE A	REVISION A / PAGE 3 of 3
		APPROVED: T. SASADA	DATE 6-16-03		
UNITS: IN[mm]	SCALE: BY VIEW	ORIGINAL DESIGN: -	DATE -	DRAWING #: DD.F7.FR6B.N1.01	