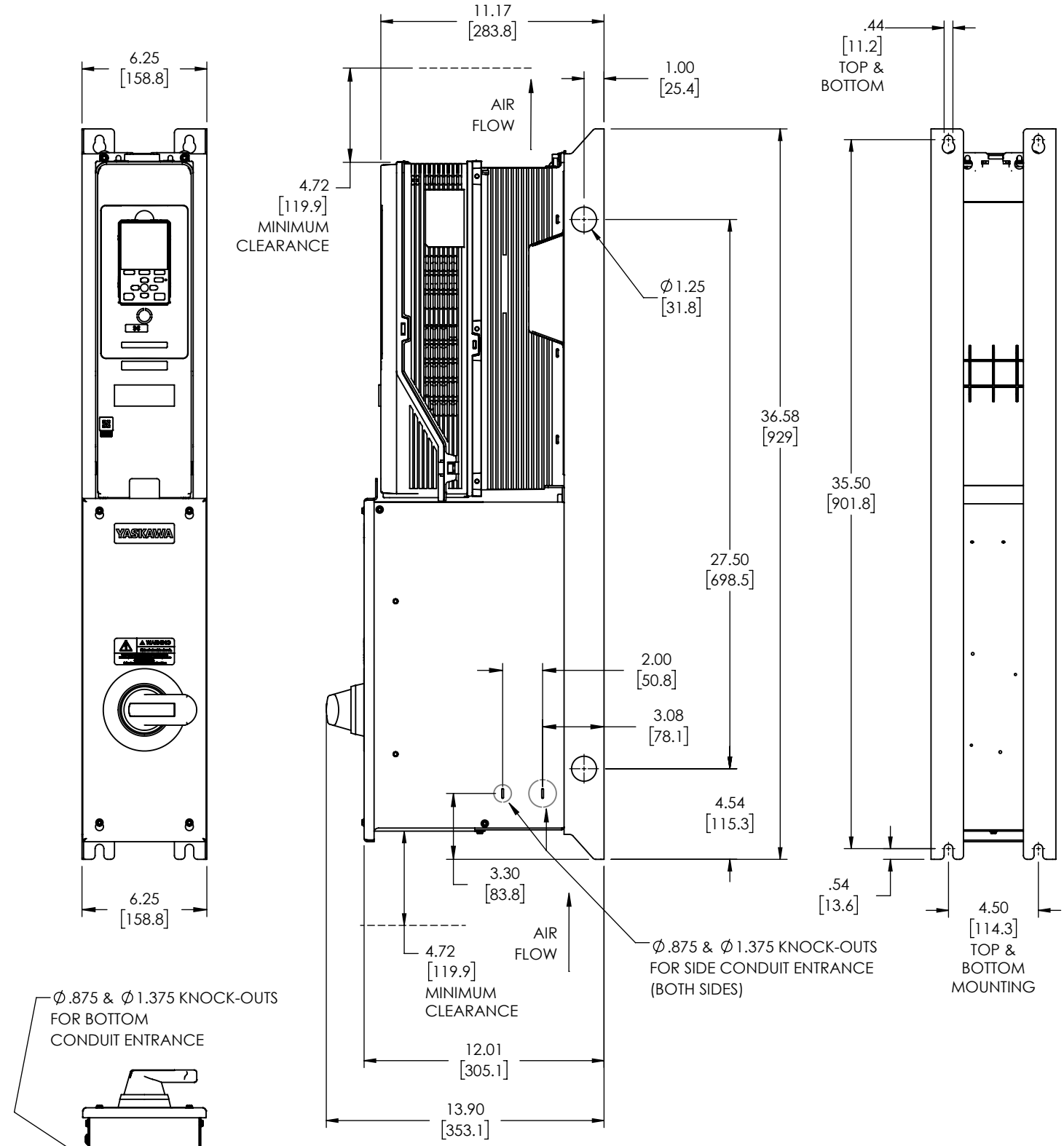

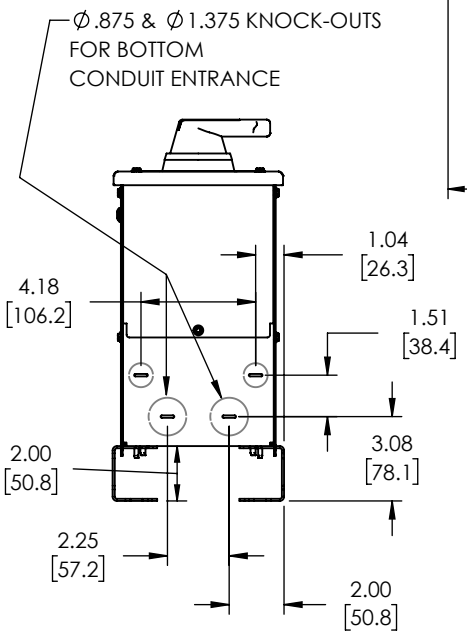

NOTES:

A. FOR REFERENCE UNLESS PROPERLY ENDORSED. FOR ADDITIONAL DETAILS AND SPECIFICATIONS, CONSULT YASKAWA AMERICA, INC.

B. DIMENSIONS ARE IN INCHES[MILLIMETERS].

C. USE APPROPRIATE TYPE RATED HUBS OR FITTINGS TO MAINTAIN ENCLOSURE RATING.

YASKAWA	ORIGINAL DESIGN: D. Dahlman	DATE: 08/21/2018	TITLE: DIMENSION DRAWING, HV600, O/U, CONFIG, W2			
THIS DOCUMENT AND INFORMATION CONTAINED IN IT ARE CONFIDENTIAL, AND CANNOT BE COPIED OR DISCLOSED IN WHOLE OR IN PART WITHOUT THE EXPRESS WRITTEN CONSENT OF YASKAWA AMERICA INC.	DRAWN: D. Dahlman	DATE: 01/22/2020				
	CHECKED: D. Guckenberger	DATE: 01/23/2020	SIZE: A	REVISION: 00	PAGE: 1 OF 1	
UNITS: INCHES	SCALE: NONE	APPROVED: K. Flierl	DATE: 01/30/2020	DRAWING #: DD.HC.1.W2.01		