YASKAWA

GA800 Selection Guide

AC DRIVE FOR INDUSTRIAL APPLICATIONS

IT'S PERSONAL

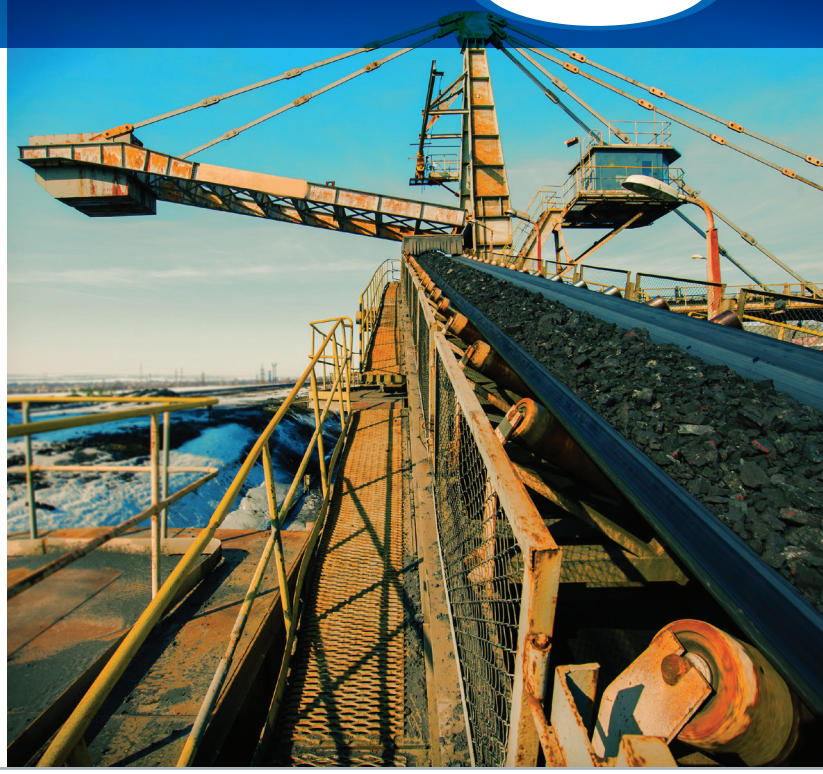



Copyright © 2021 YASKAWA AMERICA, INC.
All rights reserved. No part of this publication may be reproduced, stored in a retrieval system, or transmitted, in any form or by any means, mechanical, electronic, photocopying, recording, or otherwise, without the prior written permission of Yaskawa. No patent liability is assumed with respect to the use of the information contained herein. Moreover, because Yaskawa is constantly striving to improve its high-quality products, the information contained in this publication is subject to change without notice. Every precaution has been taken in the preparation of this publication. Yaskawa assumes no responsibility for errors or omissions. Neither is any liability assumed for damages resulting from the use of the information contained in this publication.

Table of Contents

Preface 6
- Additional Resources 6

GA800 Drives 7
- 240 V Drives 8
- 480 V Drives 9
- 480 V, 12-Pulse Drives 10
- 600 V Drives 11
- Single-Phase Capacity 11
- Dimensions 14

Single Phase Converters 16
- Type 1 Adapters 17

Control and Feedback Options 18
Keypads, Accessories, and Cables 20
Enclosure Adapters and Kits 22
Reactors and Filters 25
- DC Bus Reactors 25
- AC Input Reactors 27
- AC Output Reactors 29
- EMC Input Filters 32
- Open Type DC Bus Reactor Dimensions 34
- AC Open Reactor Dimensions 36
- AC Enclosed Reactor Dimensions 39
- EMC Input Filter Dimensions 45

Dynamic Braking 49
- 3% Dynamic Braking Options 49
- 10% Dynamic Braking Options 51
- Dynamic Braking Transistor Modules 55

R1000 Regenerative Braking 58
- R1000 Power Regenerative Unit Kits 58
- R1000 Power Regenerative Units 59
- R1000 Model Selection 200 to 240 V 59
- R1000 Model Selection 380 to 480 V 60
- R1000 Power Regenerative Unit Options 61

GA800 Configured Packages 63
- Additional Configured Package Options 67
- Package Descriptions 69
- Type 1 Configured Package Dimensions 72
- Type 12 Configured Package Dimensions 76
- Type 3R Configured Package Dimensions 80

GA800 Technical Data 85
- Common Specifications 85
- Short Circuit Protection 86

Watt Loss 89
Environmental Derating 91
Voltage Derating Considerations based on Altitude 93
Carrier Frequency Derating 94
Technical Training 97
Terms and Conditions 98

Preface

This selection guide may describe trademarked equipment, which is the property of other companies. These trademarks are the property of the registered owner companies and may include the following:

DeviceNet™, trademark of ODVA

Modbus®, trademark of Schneider Automation, Inc.

EtherCAT, trademark of Beckhoff Automation GmbH, Germany

MECHATROLINK - I, II, III, trademarks of MECHATROLINK Members Association

PROFIBUS®, trademark of PROFIBUS International.

PROFINET®, trademark of PROFIBUS International.

Ethernet/IP, trademark of ODVA

Bluetooth® word mark and logos are registered trademarks owned by Bluetooth SIG, Inc.

Unless otherwise noted, throughout this document, the term “Type” (when related to enclosure solutions) refers not only to NEMA Type, but also represents UL Listing for the specific Type(s).

Other documents and manuals are available to support special use or installation of this product. These documents may be provided with the product or upon request. Contact Yaskawa America, Inc. or visit www.yaskawa.com.

The intended users for this document are Yaskawa sales personnel, distributors, and partners.

Additional Resources

The Yaskawa.com website has the most current information for all Yaskawa products. When researching product specifications or features the Yaskawa website is the best resource to use. Some useful links for the GA800 drive product are listed here and throughout this document:

Resource Links	
GA800 Product Page	Product Instructions
Specifications	Brochure
	Product Order Page

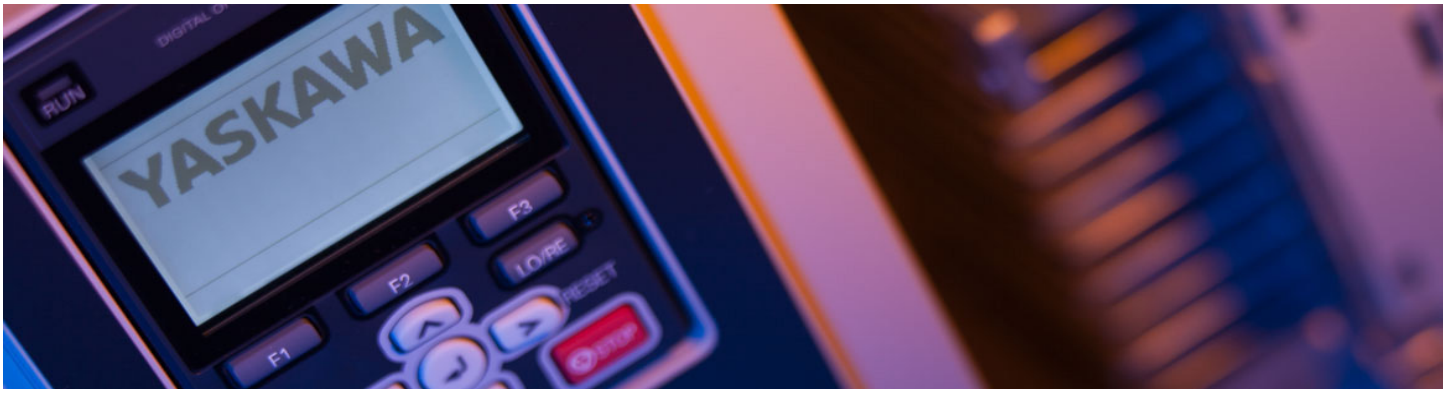

GA800 Drives



The GA800 offers two separate performance ratings: Heavy Duty and Normal Duty. Heavy Duty is capable of creating more powerful torque, while Normal Duty allows the drive to operate a larger motor.

Figure 1: Catalog Code

GA80 U 2 004 A B M

Model Series

No.	Region Code
U	Americas

No.	Input Power Supply Voltage
2	3-Phase 240 V Class
4	3-Phase 480 V Class
5	3-Phase 600 V Class
T	12-Pulse 480 V Class

Output Current
Indicates the Normal Duty rated current of the drive.

No.	Environmental Specifications
M	Humidity, dust

No.	Enclosure Type
A	IP00
B	IP20
W	Flange (Type 12 Backside)

No.	EMC Noise Filter
A	Not Used

Additional Information
GA800 Product Page

240 V Drives

Table 1: Three-Phase 240 Volt Drives - 1 to 150 HP

Normal Duty Output[1]		Heavy Duty Output[1]		Protected Chassis Drives[2]	Flange (Type 12 backside)[3]
HP	Amps	HP	Amps	Catalog Code GA80U . .	Catalog Code GA80U . .
1	4.2	0.75	3.5	2004ABM	2004AWM
1.5	6	1	5	2006ABM	2006AWM
2	8	1.5	6.9	2008ABM	2008AWM
3	9.6	2	8	2010ABM	2010AWM
4	12.2	3	11	2012ABM	2012AWM
5	17.5	4	14	2018ABM	2018AWM
7.5	22	5	17.5	2021ABM	2021AWM
10	30	7.5	25	2030ABM	2030AWM
15	42	10	33	2042ABM	2042AWM
20	56	15	47	2056ABM	2056AWM
25	70	20	60	2070ABM	2070AWM
30	82	25	75	2082ABM	2082AWM
40	110	30	88	2110ABM	2110AWM
50	138	40	115	2138ABM	2138AWM
60	169	50	145	2169ABM	2169AWM
75	211	60	180	2211ABM	2211AWM
100	257	75	215	2257ABM	2257AWM
125	313	100	283	2313ABM	2313AWM
150	360	125	346	2360ABM	2360AWM
150	415	150	415	2415ABM	2415AWM

1 Output capacities are for conditions of 3 phase input, DC input, and 12 pulse input. Refer to Drive Derating for single-phase capabilities.

2 Protected Chassis Drives are intended for clean conditions, and can be mounted three different ways as follows:
A) In a separate enclosure with heatsink internal (no extra mounting brackets required)
B) In a separate enclosure with heatsink external. Refer to Enclosure Adapters and Kits for sizes requiring extra mounting brackets.
C) Without a separate enclosure, all sizes require Type 1 Adapters (refer to Enclosure Adapters and Kits)

3 Flange Drives are intended for mounting inside separate Type 12 enclosures with heatsink external, when the external environment is dirty or dusty (Type 12 backside). No additional adapters required.

480 V Drives

Table 2: Three-Phase 480 Volt Drives - 1 to 1000 HP

Normal Duty Output[1]		Heavy Duty Output[1]		Protected Chassis Drives[2]	Flange (Type 12 backside)[3]
HP	Amps	HP	Amps	Catalog Code GA80U . .	Catalog Code GA80U . .
1	2.1	0.75	1.8	4002ABM	4002AWM
2	4.1	1.5	3.4	4004ABM	4004AWM
3	5.4	2	4.8	4005ABM	4005AWM
4	7.1	3	5.5	4007ABM	4007AWM
5	8.9	4	7.2	4009ABM	4009AWM
7.5	11.9	5	9.2	4012ABM	4012AWM
10	17.5	7.5	14.8	4018ABM	4018AWM
15	23.4	10	18	4023ABM	4023AWM
20	31	15	24	4031ABM	4031AWM
25	38	20	31	4038ABM	4038AWM
30	44	25	39	4044ABM	4044AWM
40	59.6	30	45	4060ABM	4060AWM
50	74.9	40	60	4075ABM	4075AWM
60	89.2	50	75	4089ABM	4089AWM
75	103	60	91	4103ABM	4103AWM
100	140	75	112	4140ABM	4140AWM
125	168	100	150	4168ABM	4168AWM
150	208	125	180	4208ABM	4208AWM
200	250	150	216	4250ABM	4250AWM
250	302	200	260	4302ABM	4302AWM
300	371	250	304	4371ABM	4371AWM
350	414	300	371	4414ABM	4414AWM
400	477	350	414	4477ABM	4477AWM
450	568	400	477	4568ABM	4568AWM
500	675	450	605	4605ABM	4605AWM
600	720	500	605	4720ABM	4720AWM
700	810	600	720	4810AAM[4]	Add kit ZPSD-700-EH12-FR12 for this capability
800	930	700	810	4930AAM[4]	
900	1090	800	930	4H11AAM[4]	
1000	1200	900	1090	4H12AAM[4]	

1 Output capacities are for conditions of 3 phase input, DC input, and 12 pulse input. Refer to Drive Derating for single-phase capabilities.

2 Protected Chassis Drives are intended for clean conditions, and can be mounted three different ways as follows:
A) In a separate enclosure with heatsink internal (no extra mounting brackets required)
B) In a separate enclosure with heatsink external. Refer to Enclosure Adapters and Kits for sizes requiring extra mounting brackets.
C) Without a separate enclosure, all sizes require Type 1 Adapters (refer to Enclosure Adapters and Kits)

3 Flange Drives are intended for mounting inside separate Type 12 enclosures with heatsink external, when the external environment is dirty or dusty (Type 12 backside). No additional adapters required.

4 Models 4810AAM to 4H12AAM are user-configurable for either 6-Pulse (3-Phase) or 12-Pulse (6-Phase) input.

480 V, 12-Pulse Drives

Table 3: Three-Phase, 12-Pulse, 480 Volt IP00 Drives - 75 to 1000 HP

Normal Duty Output[1]		Heavy Duty Output[1]		Protected Chassis Drives[2]	Flange (Type 12 backside)[3]
HP	Amps	HP	Amps	Catalog Code GA80U . .	Catalog Code GA80U . .
75	103	60	91	T103AAM	T103AWM
100	140	75	112	T140AAM	T140AWM
125	168	100	150	T168AAM	T168AWM
150	208	125	180	T208AAM	T208AWM
200	250	150	216	T250AAM	T250AWM
250	302	200	260	T302AAM	T302AWM
300	371	250	304	T371AAM	T371AWM
350	414	300	371	T414AAM	T414AWM
400	477	350	414	T477AAM	T477AWM
450	568	400	477	T568AAM	T568AWM
500	675	450	605	T605AAM	T605AWM
600	720	500	605	T720AAM	T720AWM
700	810	600	720	4810AAM[4]	Add kit ZPSD-700-EH12-FR12 for this capability
800	930	700	810	4930AAM[4]	
900	1090	800	930	4H11AAM[4]	
1000	1200	900	1090	4H12AAM[4]	

1 Output capacities are for conditions of 12-Pulse (6-Phase) or 6-Pulse (3-Phase) input.

2 Protected Chassis Drives are intended for clean conditions, and can be mounted two different ways as follows:
A) In a separate enclosure with heatsink internal (no extra mounting brackets required)
B) In a separate enclosure with heatsink external. Refer to Enclosure Adapters and Kits for sizes requiring extra mounting brackets.

3 Flange Drives are intended for mounting inside separate Type 12 enclosures with heatsink external, when the external environment is dirty or dusty (Type 12 backside). No additional adapters required.

4 Models 4810AAM to 4H12AAM are user-configurable for either 6-Pulse (3-Phase) or 12-Pulse (6-Phase) input.

600 V Drives

Table 4: Three-Phase 600 Volt Drives - 300 to 500 HP

Normal Duty Output[1]		Heavy Duty Output[1]		Protected Chassis Drives[2]	Flange (Type 12 backside)[3]
HP	Amps	HP	Amps	Catalog Code GA80U . .	Catalog Code GA80U . .
125	125	100	99	5125ABM	5125AWM
150	144	125	125	5144ABM	5144AWM
200	192	150	172	5192ABM	5192AWM
250	242	200	192	5242ABM	5242AWM
300	289	250	242	5289ABM	5289AWM
400	382	350	336	5382ABM	5382AWM
450	412	400	382	5412ABM	5412AWM
500	472	450	412	5472ABM	5472AWM

1 Output capacities are for conditions of 3 phase input, DC input, and 12 pulse input. Refer to Drive Derating for single-phase capabilities.

2 Protected Chassis Drives are intended for clean conditions, and can be mounted three different ways as follows:
A) In a separate enclosure with heatsink internal (no extra mounting brackets required)
B) In a separate enclosure with heatsink external. Refer to Enclosure Adapters and Kits for sizes requiring extra mounting brackets.
C) Without a separate enclosure, all sizes require Type 1 Adapters (refer to Enclosure Adapters and Kits)

3 Flange Drives are intended for mounting inside separate Type 12 enclosures with heatsink external, when the external environment is dirty or dusty (Type 12 backside). No additional adapters required.

Single-Phase Capacity

Additional Information
GA800 Product Page

Select partial catalog code from these single-phase tables. Then select the complete catalog code from the 240 and 480 Volt three-phase drive tables.

Table 5: 240 Volt, Single-Phase Input, Three-Phase Output

Drive Catalog Code GA80U . . 1 2	No Reactor		With Reactor					
	Drive Output Capacity		Drive Output Capacity		AC Input Type		DC Bus Type	
					Open	Type 1 Enclosed	Open	Type 1 Enclosed
	HP	Amps	HP	Amps	Part Number	Part Number	Part Number	Part Number
2004 . . .	1/3	1.52	1/2	2.2	URX000303	URX000411	URX000043	Not Available
2006 . . .	1/2	2.2	3/4	3.2	URX000303	URX000411	URX000043	
2008 . . .	3/4	3.2	1	4.2	URX000307	URX000413	05P00620-0113	URX000435
2010 . . .	1	4.2	1.5	6	URX000316	URX000419	05P00620-0115	URX000259
2012 . . .	1.5	6	2	6.8	URX000315	URX000418	05P00620-0115	URX000259
2018 . . .	2	6.8	3	9.6	URX000319	URX000420	URX000050	Not Available
2021 . . .	2	6.8	3	9.6	URX000323	URX000422	05P00620-0120	URX000261
2030 . . .	2	6.8	5	15.2	URX000323	URX000422	05P00620-0120	URX000261
2042 . . .	3	9.6	7.5	22	URX000326	URX000424	05P00620-0123	URX000436

Drive Catalog Code GA80U . . [1] [2]	No Reactor		With Reactor					
	Drive Output Capacity		Drive Output Capacity		AC Input Type		DC Bus Type	
					Open	Type 1 Enclosed	Open	Type 1 Enclosed
	HP	Amps	HP	Amps	Part Number	Part Number	Part Number	Part Number
2056 . . .	3	9.6	7.5	22	URX000326	URX000424	URX000059	URX000262
2070 . . .	5	15.2	10	28	URX000332	URX000426	URX000063	URX000264
2082 . . .	7.5	22	10	28	URX000338	URX000428	URX000072	URX000266
2110 . . .	10	28	15	42	URX000338	URX000428	Drives 2110 and larger include integrated DC bus reactor	
2138 . . .	10	28	10	28	URX000338	URX000428		
2169 . . .	15	42	20	54	URX000344	URX000430		
2211 . . .	20	54	25	68	URX000347	URX000431		
2257 . . .	30	80	30	80	Do not use reactor for this rating			
2313 . . .	30	80	40	104	URX000353	URX000433		
2360 . . .	40	104	50	130	URX000353	URX000433		
2415 . . .	50	130	60	154	URX000356	URX000434		

1. This information reflects derating of three-phase drives for single-phase input applications. Refer to the Single Phase Converter to select a converter that provides full power (no derating) for some drives when used with single-phase power.
2. Select the partial catalog code from this single-phase table, then refer to the Three-Phase Drive table to select the complete drive catalog code based on enclosure type.

Table 6: 480 Volt, Single-Phase Input, Three-Phase Output

Drive Catalog Code GA80U . . [1] [2]	No Reactor		With Reactor					
	Drive Output Capacity		Drive Output Capacity		AC Input Type		DC Bus Type	
					Open	Type 1 Enclosed	Open	Type 1 Enclosed
	HP	Amps	HP	Amps	Part Number	Part Number	Part Number	Part Number
4002 . . .	1/3	0.76	1/2	1.1	URX000295	URX000409	05P00608-3007	Not Available
4004 . . .	3/4	1.6	1	2.1	URX000303	URX000411	05P00608-3007	
4005 . . .	1	2.1	1.5	3	URX000303	URX000411	05P00608-3007	
4007 . . .	1	2.1	2	3.4	URX000308	URX000414	05P00652-0213	URX000209
4009 . . .	2	3.4	3	4.8	URX000312	URX000416	05P00620-0113	URX000435
4012 . . .	2	3.4	3	4.8	URX000316	URX000419	05P00620-0115	URX000259
4018 . . .	3	4.8	5	7.6	URX000316	URX000419	URX000052	URX000211
4023 . . .	3	4.8	5	7.6	URX000316	URX000419	URX000052	URX000211
4031 . . .	3	4.8	10	14	URX000324	URX000423	URX000055	URX000223
4038 . . .	5	7.6	10	14	URX000326	URX000424	05P00620-0123	URX000436
4044 . . .	5	7.6	15	21	URX000330	URX000553	URX000059	URX000262

Drive Catalog Code GA80U . . [1] [2]	No Reactor		With Reactor					
	Drive Output Capacity		Drive Output Capacity		AC Input Type		DC Bus Type	
					Open	Type 1 Enclosed	Open	Type 1 Enclosed
	HP	Amps	HP	Amps	Part Number	Part Number	Part Number	Part Number
4060 . . .	10	14	10	14	URX000332	URX000426	Drives 4060 and larger include integrated DC bus reactor	
4075 . . .	10	14	15	21	URX000333	URX000554		
4089 . . .	15	21	15	21	URX000335	URX000427		
4103 . . .	15	21	15	21	URX000338	URX000428		
4140 . . .	25	34	25	34	URX000341	URX000429		
4168 . . .	25	34	30	40	URX000341	URX000429		
4208 . . .	50	65	50	65	URX000347	URX000431		
4250 . . .	50	65	50	65	URX000350	URX000432		
4302 . . .	50	65	60	77	URX000353	URX000433		
4371 . . .	75	96	75	96	URX000356	URX000434		
4414 . . .	100	124	100	124	URX000356	URX000434		
4477 . . .	125	156	150	180	URX000359	URX000566		
4568 . . .	125	156	150	180	URX000359	URX000566		
4605 . . .	150	180	200	240	URX000365	URX000581		
4720 . . .	150	180	200	240	URX000365	URX000581		

1. This information reflects derating of three-phase drives for single-phase input applications. Refer to the Single Phase Converter to select a converter that provides full power (no derating) for some drives when used with single-phase power.
2. Select the partial catalog code from this single-phase table, then refer to the Three-Phase Drive table to select the complete drive catalog code based on enclosure type.

Dimensions

Figure 2: Frames 1 to 3.5

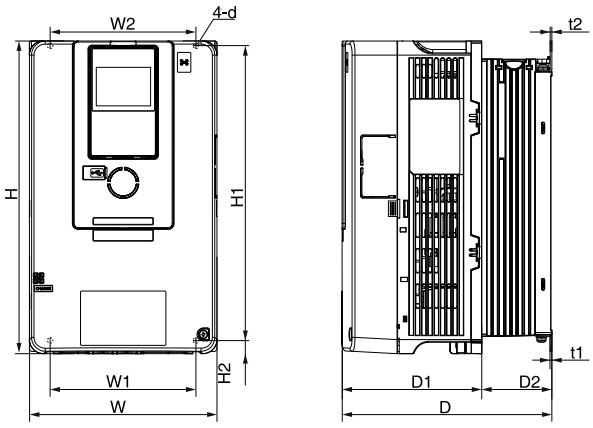

Figure 3: Frames 4 and Larger

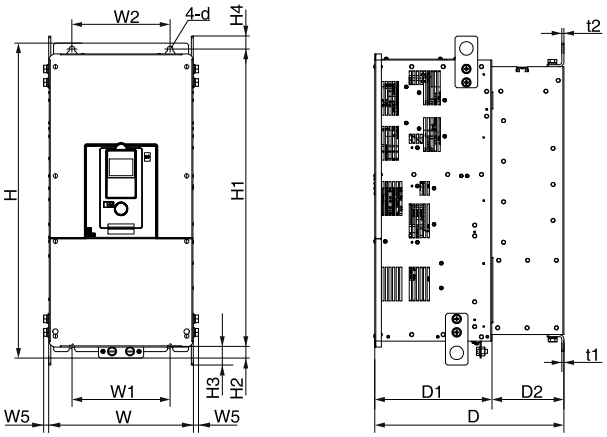

Additional Information	
Frame 1 - Models 2004 - 2012 4002 - 4005	Frame 1.5 - Models 2018 - 2042, 4007 - 4023
Frame 2 - Models 2056, 4031 - 4038	Frame 3 - Models 2070 - 2082, 4044
Frame 3.5 - Model 4060	Frame 4 - Models 2110, 4075
Frame 6 - Models 2138, 4084 - 4103	Frame 7 - Models 2169 - 2211, 4140 - 4168
Frame 9 - Models 2257, 2313, 4208 - 4302	Frame 10 - Models 2360 - 2415, 4371 - 4414, 5289
Frame 11 - Models 4477 - 4720, 5382 - 5472	Frame 12 - Models 4810 - 4H12

Table 7: Frame Size and Approximate Dimensions

Power Output HP		240 V Models				480 V Models				600 V Models			
Normal Duty (ND)	Heavy Duty (HD)	Catalog Code GA80U	Output Amps		Frame	Catalog Code GA80U	Output Amps		Frame	Catalog Code GA80U	Output Amps		Frame
			ND	HD			ND	HD			ND	HD	
1.0	0.75	2004ABM	4.2	3.5	1	4002ABM	2.1	1.8	1				
1.5	1	2006ABM	6	5	1	-							
2	1.5	2008ABM	8	6.9	1	4004ABM	4.1	3.4	1				
3	2	2010ABM	9.6	8	1	4005ABM	5.4	4.8	1				
4	3	2012ABM	12.2	11	1	4007ABM	7.1	5.5	1.5				
5	4	2018ABM	17.5	14	1.5	4009ABM	8.9	7.2	1.5				
7.5	5	2021ABM	21	17.5	1.5	4012ABM	11.9	9.2	1.5				
10	7.5	2030ABM	30	25	1.5	4018ABM	17.5	14.8	1.5	-			
15	10	2042ABM	42	33	1.5	4023ABM	23.4	18	1.5				
20	15	2056ABM	56	47	2	4031ABM	31	24	2				
25	20	2070ABM	70	60	3	4038ABM	38	31	2				
30	25	2082ABM	82	75	3	4044ABM	44	39	3				
40	30	2110ABM	110	88	4	4060ABM	59.6	45	3.5				
50	40	2138ABM	138	115	6	4075ABM	74.9	60	4				
60	50	2169ABM	169	145	7	4089ABM	89.2	75	6				
75	60	2211ABM	211	180	7	4103ABM	103	91	6				
100	75	2257ABM	257	215	9	4140ABM	140	112	7				
125	100	2313ABM	313	283	9	4168ABM	168	150	7	5125ABM	125	99	9
150	125	2360ABM	360	346	10	4208ABM	208	180	9	5144ABM	144	125	9
150	150	2415ABM	415	415	10	-							
200	150					4250ABM	250	216	9	5192ABM	192	172	10
250	200					4302ABM	302	260	9	5242ABM	242	192	10
300	250					4371ABM	371	304	10	5289ABM	289	242	10
350	300					4414ABM	414	371	10	-			
400	350					4477ABM	477	414	11	5382ABM	382	336	11
450	400					4568ABM	568	477	11	5412ABM	412	382	11
500	450					4605ABM	675	605	11	5472ABM	472	412	11
600	500					4720ABM	720	605	11				
700	600					4810AAM	810	720	12				
800	700					4930AAM	930	810	12	-			
900	800					4H11AAM	1090	930	12				
1000	900					4H12AAM	1200	1090	12				

Approximate Dimensions in (mm)			
Frame	Height	Width	Depth
1	10.2 (260)	5.51 (140)	6.93 (176)
1.5	10.2 (260)	5.51 (140)	8.31 (211)
2	11.8 (300)	7.09 (180)	7.95 (202)
3	13.8 (350)	8.66 (220)	8.94 (227)
3.5	13.8 (350)	8.66 (220)	9.69 (246)
4	15.7 (400)	9.45 (240)	11.0 (280)
6	17.7 (450)	10.0 (255)	11.0 (280)
7	21.4 (543)	10.4 (264)	13.2 (335)
9	27.6 (700)	12.3 (312)	16.5 (420)
10	31.5 (800)	17.3 (440)	18.6 (472)
11	44.72 (1136)	20.1 (510)	18.9 (480)
12	1367.5 (53.84)	760 (29.92)	440 (17.32)

Single Phase Converters



Additional Information		
Flyer	Drawings	Manuals

Table 8: 240 Volt Kits by Motor Capacity

System Kit Number	System Capacity			Component Name	Component Part Number
	Maximum Total Motor Load HP (kW)	Maximum Continuous			
		Input Current (Amps)	Output DC Current (Amps)		
SPBC-240-20HP	20 (15)	79	57	Single Phase Converter	SPBC-2015AAA
				DC Link Choke	URX000530
SPBC-240-30HP	30 (22)	116	84	Single Phase Converter	SPBC-2022AAA
				DC Link Choke	URX000531
SPBC-240-40HP	40 (30)	154	112	Single Phase Converter	SPBC-2030AAA
				DC Link Choke	URX000532
SPBC-240-50HP	50 (37)	191	139	Single Phase Converter	SPBC-2037AAA
				DC Link Choke	URX000520
SPBC-240-60HP	60 (45)	228	166	Single Phase Converter	SPBC-2045AAA
				DC Link Choke	URX000521

Table 9: 480 Volt Kits by Motor Capacity

System Kit Number	System Capacity			Component Name	Part Number
	Maximum Total Motor Load HP (kW)	Maximum Continuous			
		Input Current (Amps)	Output DC Current (Amps)		
SPBC-480-30HP	30 (22)	58	42	Single Phase Converter	SPBC-4022AAA
				DC Link Choke	URX000534
SPBC-480-40HP	40 (30)	77	56	Single Phase Converter	SPBC-4030AAA
				DC Link Choke	URX000535
SPBC-480-50HP	50 (37)	96	69	Single Phase Converter	SPBC-4037AAA
				DC Link Choke	URX000536
SPBC-480-60HP	60 (45)	114	83	Single Phase Converter	SPBC-4045AAA
				DC Link Choke	URX000537
SPBC-480-75HP	75 (56)	142	103	Single Phase Converter	SPBC-4056AAA
				DC Link Choke	URX000527
SPBC-480-125HP	125 (93)	234	170	Single Phase Converter	SPBC-4093AAA
				DC Link Choke	URX000529

Type 1 Adapters

This option consists of a top and bottom cover to convert a protected chassis drive and/or DC link choke to a Type 1 enclosed unit. This option DOES NOT provide additional space for mounting auxiliary components (i.e., circuit breaker, input fuses, reactor, etc.).

Table 10: SPC Type 1 Adapters

Converter Model	Link Choke Part Number	Converter Type 1 Kit Adapter	Link Choke Type 1 Kit Adapter
		Part Number	Part Number
SPBC-2015AAA	URX000530	UUX001686	UUX001688
SPBC-2022AAA	URX000531		
SPBC-2030AAA	URX000532	UUX001687	
SPBC-2037AAA	URX000520	UUX001703	
SPBC-2045AAA	URX000521		
SPBC-4022AAA	URX000534	UUX001686	
SPBC-4030AAA	URX000535		
SPBC-4037AAA	URX000536	UUX001687	
SPBC-4045AAA	URX000537		
SPBC-4056AAA	URX000527	UUX001703	
SPBC-4093AAA	URX000529		

Control and Feedback Options



Control Options - These cards and devices add control functionality to the standard drive. Items are shipped loose and unmounted.

Additional Information	
Network Communications	I/O Adapters
Feedback Encoders	

Table 11: I/O Adapters

Part Number	Description
AI-A3	Analog Input (provides 3 additional inputs)
DI-A3	Digital Input (provides 16 additional inputs)
DI-101	120V Digital Interface (converts existing inputs)
AO-A3	Analog Monitor (provides 2 additional outputs)
DO-A3	Digital Output (provides 8 additional outputs)

Table 12: Motor Feedback

Part Number	Description
PG-X3	Incremental Encoder Interface (line driver type)
PG-B3	Incremental Encoder Interface (complimentary type)
PG-F3	Absolute Encoder Interface (Endat and Hiperface)
PG-RT3	Resolver Interface

Table 13: Network Communications

Part Number	Description
SI-EN3	EtherNet/IP
SI-EN3D	EtherNet/IP dual port
SI-ES3	EtherCAT
SI-EM3	Modbus/TCP
SI-EM3D	Modbus/TCP dual port
SI-EP3	PROFINET
SI-P3	PROFIBUS-DP
SI-N3	DeviceNet
SI-W3	LONWORKS
SI-B3	BACnet MSTP
SI-J3	APOGEE/METASYS
SI-S3	CANopen
SI-C3	CC-Link
SI-T3	MECHATROLINK-II
SI-ET3	MECHATROLINK-III

Keypads, Accessories, and Cables

Additional Information
Keypads and Cables

Table 14: Keypads

Part Number	Description
JVOP-KPLCA04MEB	Standard LCD Local/Remote Keypad (comes standard with GA800)
JVOP-KPLCC04MBB	LCD Keypad with Bluetooth



Standard LCD Keypad



LCD Keypad with Bluetooth

Table 15: Remote Mount Adapters

Part Number	Description
900-192-933-001	Type 1 Keypad Panel Mount Kit A (brackets have tapped holes for use with screws)
900-192-933-002	Type 1 Keypad Panel Mount Kit B (brackets have untapped holes for use with panel studs)
900-239-230-001	Type 12/3R Keypad Panel Mount Kit (with embedded studs)
UUX001955	Type 4X Keypad Panel Mount Kit

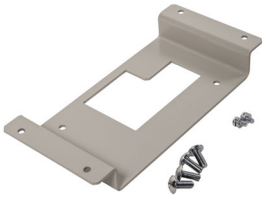

-001 Type 1 Screw Mount

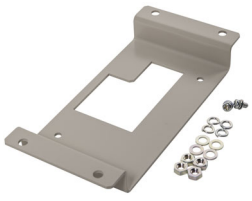

-002 Type 1 Stud Mount



Type 12/3R Mount (with embedded studs)

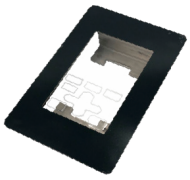

Type 4X Keypad Panel Mount

Table 16: Cables

Part Number	Description
UWR0051	Keypad Remote Cable - 1 m (3.3 ft)
UWR0052	Keypad Remote Cable - 3 m (9.8 ft)
UWR01258	USB Cable for PC to Drive Communication - 3 m (9.8 ft)

Table 17: Android Mobile Device Interface Cables (to connect an Android device to the USB port on drive)

Part Number	Description
UWR01516-B	USB Cable, USB Mini-B to USB Micro-B. On-The-Go (OTG) compatible, 2 m (6.6 ft) length.
UWR01516-C	USB Mini-B to USB Type-C. On-The-Go (OTG) compatible, 2 m (6.6 ft) length.

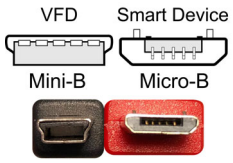

UWR01516-B - USB Mini-B to USB Micro-B

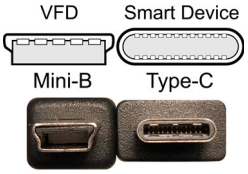

UWR01516-C - USB Mini-B to USB Type-C

Enclosure Adapters and Kits

These adapters are for mounting the protected chassis drives directly to a wall, a machine in a clean environment (Type 1), or inside a Type 1 enclosure with external heatsink. The Type 1 Adapter converts a Protected Chassis Drive (IP20) to an enclosed wall-mounted drive (Type 1). The A1000 to GA800 adapters allow a GA800 to mount where an A1000 was previously mounted.



Type 1 Adapter



External Heatsink Adapter



A1000 to GA800 Adapters

Table 18: 240 Volt Drive Mounting Adapters

Catalog Code GA80U . .	Standard Type 1 Adapters	Fuse Ready Type 1 Adapters[1]	Internal Fuses (Bussmann FWH Series) for Fuse Ready Adapters[1 2]	External Heatsink Adapters	A1000 to GA800 Adapters
	Part Number	Part Number	Part Number	Part Number	Part Number
2004ABM	900-192-121-001	Not Available	Not Available	900-193-209-001	900-195-081-001
2006ABM					
2008ABM					
2010ABM					
2012ABM					
2018ABM					
2021ABM					
2030ABM					
2042ABM					
2056ABM	900-192-121-002			900-193-209-002	900-195-081-002
2070ABM	900-192-121-003			900-193-209-003	Not Available
2082ABM	900-192-121-004				
2110ABM	900-192-121-005			Included as standard (see instructions)	
2138ABM	900-192-121-006				
2169ABM	900-192-121-007	UUX002314	UFU000037		
2211ABM	900-192-121-008		UFU000039		
2257ABM	900-192-121-009	UUX002315	05P00017-0265		
2313ABM			UFU000046		
2360ABM	900-192-121-010	UUX001700	UFU000047		
2415ABM			UFU000048		

1. Fuse Ready Type 1 kits are for use only with matching semiconductor fuses as specified (no substitutes).
2. Fuses sold individually. Quantity 3 required per drive.

Table 19: 480 Volt Drive Mounting Adapters

Catalog Code GA80U . .	Standard Type 1 Adapters	Fuse Ready Type 1 Adapters[1]	Internal Fuses (Bussmann FWH Series) for Fuse Ready Adapters[1 2]	External Heatsink Adapters	A1000 to GA800 Adapters
	Part Number	Part Number	Part Number	Part Number	Part Number
4002ABM	900-192-121-001	Not Available	Not Available	900-193-209-001	900-195-081-001
4004ABM					
4005ABM					
4007ABM					
4009ABM					
4012ABM					
4018ABM					
4023ABM					
4031ABM	900-192-121-002			900-193-209-002	900-195-081-002
4038ABM					
4044ABM	900-192-121-003			900-193-209-003	Not Available
4060ABM					
4075ABM	900-192-121-005			Included as standard (see instructions)	
4089ABM	900-192-121-006				
4103ABM					
4140ABM	900-192-121-007	UUX002314	UFU000038		
4168ABM			UFU000039		
4208ABM	900-192-121-009	UUX002315	UFU000044		
4250ABM			05P00017-0265		
4302ABM			UFU000046		
4371ABM	Not Available	UUX001700	UFU000047		
4414ABM					
4477ABM		UUX001701	UFU000048		
4568ABM					
4605ABM			UFU000049		
4720ABM					
4810ABM	Not Available			ZPSD-700-EH12-FR12[3]	
4930AAM					
4H11AAM					
4H12AAM					

1. Fuse Ready Type 1 kits are for use only with matching semiconductor fuses as specified (no substitutes).
2. Fuses sold individually. Quantity 3 required per drive.
3. Use this flange kit when external heatsink with Type 12 seal is required.

Table 20: 600 Volt Drive Mounting Adapters

Catalog Code GA80U . .	Standard Type 1 Adapters	Fuse Ready Type 1 Adapters[1]	Internal Fuses (Bussmann FWP Series) for Fuse Ready Adapters[1 2]	External Heatsink Adapters	A1000 to GA800 Adapters
	Part Number	Part Number	Part Number	Part Number	Part Number
5125ABM	Not Available	UUX002315	UFU000977	Included as standard (see instructions)	Not Available
5144ABM					
5192ABM		UUX001700	UFU000801		
5242ABM			UFU000802		
5289ABM					
5382ABM		UUX001701	UFU000254		
5412ABM					
5472ABM			05P00017-0214		

1. Fuse Ready Type 1 kits are for use only with matching semiconductor fuses as specified (no substitutes).
2. Fuses sold individually. Quantity 3 required per drive.

Reactors and Filters

DC Bus Reactors



Additional Information
DC Reactors

DC Bus Reactor- For use on the DC bus terminals of a drive to reduce the effect of line-side transients and input current total harmonic distortion (THD). Large HP drives include a 3% bus impedance as standard. The DC bus reactor is available, loose, in a separate Type 1 enclosure.

Table 21: 240 Volt DC Bus Reactor

HP	Catalog Code GA80U . .		3% DC Bus Reactor		5% DC Bus Reactor	
	Normal Duty	Heavy Duty	Open Type	Enclosed Type 1	Open Type	Enclosed Type 1
			Part Number	Part Number	Part Number	Part Number
0.5	2004 . . .	2004 . . .	URX000036	URX000207	URX000037	URX000217
0.75	2004 . . .	2004 . . .	05P00608-3007	URX000208	URX000041	URX000207
1	2006 . . .	2006 . . .	05P00608-3007	URX000208	URX000041	URX000207
1.5	2006 . . .	2008 . . .	05P00620-0110	URX000257	05P00620-0111	URX000208
2	2008 . . .	2010 . . .	05P00620-0110	URX000257	05P00620-0111	URX000208
3	2010 . . .	2012 . . .	URX000371	URX000258	05P00652-0213	URX000209
4	2012 . . .	2018 . . .	05P00620-0115	URX000259	URX000048	URX000210
5	2018 . . .	2021 . . .	05P00620-0115	URX000259	URX000048	URX000210
7.5	2021 . . .	2030 . . .	URX000051	URX000212	URX000052	URX000211
10	2030 . . .	2042 . . .	05P00620-0120	URX000261	URX000055	URX000223
15	2042 . . .	2056 . . .	URX000059	URX000262	URX000060	URX000222
20	2056 . . .	2070 . . .	URX000063	URX000264	URX000064	URX000213
25	2070 . . .	2082 . . .	05P00620-0129	URX000214	URX000069	URX000265
30	2082 . . .	--	URX000072	URX000266	URX000073	URX000265
40 to 150	Drive models 2110 through 2415 have built-in DC reactors.					

Table 22: 480 Volt DC Bus Reactor

HP	Catalog Code GA80U . .		3% DC Bus Reactor		5% DC Bus Reactor	
	Normal Duty	Heavy Duty	Open Type	Enclosed Type 1	Open Type	Enclosed Type 1
			Part Number	Part Number	Part Number	Part Number
0.5	4002 . . .	4002 . . .	URX000033	URX000215	URX000034	URX000215
0.75	4002 . . .	4002 . . .	URX000038	URX000216	URX000039	URX000215
1	4002 . . .	4004 . . .	URX000038	URX000216	URX000039	URX000215
1.5	4004 . . .	4004 . . .	05P00620-0109	URX000217	URX000042	URX000216
2	4004 . . .	4005 . . .	URX000041	URX000207	URX000042	URX000216
3	4005 . . .	4007 . . .	URX000044	URX000218	URX000044	URX000218
4	4007 . . .	4009 . . .	URX000044	URX000218	URX000044	URX000218
5	4009 . . .	4012 . . .	05P00620-0111	URX000208	URX000044	URX000218
7.5	4012 . . .	4018 . . .	05P00652-0213	URX000209	URX000046	URX000219
10	4018 . . .	4023 . . .	05P00652-0216	URX000220	URX000049	URX000260
15	4023 . . .	4031 . . .	URX000052	URX000211	URX000054	URX000224
20	4031 . . .	4038 . . .	URX000055	URX000223	URX000056	URX000221
25	4038 . . .	4044 . . .	URX000057	URX000184	URX000058	URX000225
30	4044 . . .	--	URX000061	URX000222	URX000062	URX000263
40 to 1000	Drive models 4060 through 4H12 have built-in DC reactors.					

AC Input Reactors



Additional Information
AC Input Reactors

3% and 5% impedance reactors may be used on the input of a drive to reduce the effect of line-side transients on the drive. The reactors are available loose or in a separate Type 1 enclosure.

Table 23: 240 Volt AC Input Reactors

HP	Catalog Code GA80U . .		3% Input Reactor		5% Input Reactor	
	Normal Duty	Heavy Duty	Open Type	Enclosed Type 1	Open Type	Enclosed Type 1
			Part Number	Part Number	Part Number	Part Number
0.5	2004 . . .	2004 . . .	URX000287	URX000583	URX000292	URX000502
0.75	2004 . . .	2006 . . .	URX000295	URX000409	URX000296	URX000584
1	2004 . . .	2006 . . .	URX000295	URX000409	URX000300	URX000503
1.5	2006 . . .	2008 . . .	URX000299	URX000410	URX000300	URX000503
2	2008 . . .	2010 . . .	URX000303	URX000411	URX000304	URX000504
3	2010 . . .	2012 . . .	URX000307	URX000413	URX000308	URX000414
4	2012 . . .	2018 . . .	URX000307	URX000413	URX000312	URX000416
5	2018 . . .	2021 . . .	URX000311	URX000415	URX000316	URX000419
7.5	2021 . . .	2030 . . .	URX000315	URX000418	URX000320	URX000421
10	2030 . . .	2042 . . .	URX000319	URX000420	URX000324	URX000423
15	2042 . . .	2056 . . .	URX000326	URX000424	URX000330	URX000553
20	2056 . . .	2070 . . .	URX000332	URX000426	URX000333	URX000554
25	2070 . . .	2082 . . .	URX000335	URX000427	URX000336	URX000555
30	2082 . . .	-	URX000338	URX000428	URX000339	URX000556
30	-	2110 . . .	URX000338	URX000428	5% input reactor not recommended for these drive sizes	
40	2110 . . .	2138 . . .	URX000338	URX000428		
50	2138 . . .	2169 . . .	URX000341	URX000429		
60	2169 . . .	2211 . . .	URX000344	URX000430		
75	2211 . . .	2257 . . .	URX000347	URX000431		
100	2257 . . .	2313 . . .	URX000350	URX000432		
125	2313 . . .	2360 . . .	URX000356	URX000434		
150	2360 . . .	2415 . . .	URX000356	URX000434		

Table 24: 480 Volt AC Input Reactors

HP	Catalog Code GA80U . .		3% Input Reactor		5% Input Reactor	
	Normal Duty	Heavy Duty	Open Type	Enclosed Type 1	Open Type	Enclosed Type 1
			Part Number	Part Number	Part Number	Part Number
0.5	4002 . . .	4002 . . .	URX000284	URX000585	URX000286	URX000569
0.75	4002 . . .	4002 . . .	URX000288	URX000551	URX000285	URX000570
1	4002 . . .	4004 . . .	URX000292	URX000502	URX000289	URX000571
1.5	4004 . . .	4004 . . .	URX000301	URX000552	URX000293	URX000572
2	4004 . . .	4005 . . .	URX000296	URX000584	URX000297	URX000573
3	4005 . . .	4007 . . .	URX000300	URX000503	URX000301	URX000552
4	4007 . . .	4009 . . .	URX000304	URX000504	URX000306	URX000412
5	4009 . . .	4012 . . .	URX000304	URX000504	URX000305	URX000574
7.5	4012 . . .	4018 . . .	URX000308	URX000414	URX000309	URX000505
10	4018 . . .	4023 . . .	URX000312	URX000416	URX000313	URX000417
15	4023 . . .	4031 . . .	URX000316	URX000419	URX000317	URX000568
20	4031 . . .	4038 . . .	URX000320	URX000421	URX000321	URX000575
25	4038 . . .	4044 . . .	URX000324	URX000423	URX000325	URX000576
30	4044 . . .	-	URX000327	URX000425	URX000328	URX000577
30	-	4060 . . .	URX000327	URX000425	5% input reactor not recommended for these drive sizes	
40	4060 . . .	4075 . . .	URX000330	URX000553		
50	4075 . . .	4089 . . .	URX000333	URX000554		
60	4089 . . .	4103 . . .	URX000336	URX000555		
75	4103 . . .	4140 . . .	URX000339	URX000556		
100	4140 . . .	4168 . . .	URX000342	URX000557		
125	4168 . . .	4208 . . .	URX000345	URX000558		
150	4208 . . .	4250 . . .	URX000348	URX000559		
200	4250 . . .	4302 . . .	URX000351	URX000560		
250	4302 . . .	4371 . . .	URX000354	URX000561		
300	4371 . . .	4414 . . .	URX000357	URX000562		
350	4414 . . .	4477 . . .	URX000360	URX000563		
400	4477 . . .	4568 . . .	URX000360	URX000563		
450	4568 . . .	4605 . . .	URX000363	URX000564		
500	4605 . . .	4720 . . .	URX000363	URX000564		
600	4720 . . .	4810 . . .	URX000366	URX000565		
700	4810 . . .	4930 . . .	URX000230	URX000254		
800	4930 . . .	4H11 . . .	URX000236	URX000244		
900	4H11 . . .	4H12 . . .	URX000239	URX000246		
1000	4H12 . . .	-	URX000239	URX000246		

Table 25: 600 V AC Input Reactor

HP	Catalog Code GA80U . .		3% Input Reactor		5% Input Reactor	
	Normal Duty	Heavy Duty	Open Type	Enclosed Type 1	Open Type	Enclosed Type 1
			Part Number	Part Number	Part Number	Part Number
100	-	5125 . . .	URX000339	URX000556	5% input reactor not recommended for these drive sizes	
125	5125 . . .	5144 . . .	URX000342	URX000557		
150	5144 . . .	5192 . . .	URX000345	URX000558		
200	5192 . . .	5242 . . .	URX000348	URX000559		
250	5242 . . .	5289 . . .	URX000351	URX000560		
300	5289 . . .	5382 . . .	URX000354	URX000561		
350	5382 . . .	5382 . . .	URX000357	URX000562		
400	5382 . . .	5412 . . .	URX000357	URX000562		
450	5412 . . .	5472 . . .	URX000357	URX000562		
500	5472 . . .	-	URX000360	URX000563		

AC Output Reactors



Additional Information
AC Output Reactors

3% impedance reactors may be used on the output of a drive to reduce the effect of load-side transients on the motor. The reactors are available loose or in a separate Type 1 enclosure.

Table 26: 240 Volt AC Output Reactors

HP	Catalog Code GA80U . .		3% Output Reactor	
	Normal Duty	Heavy Duty	Open Type	Enclosed Type 1
			Part Number	Part Number
0.5	2004 . . .	2004 . . .	05P00620-0132	05P00620-0021
0.75	2004 . . .	2004 . . .	05P00620-0017	05P00620-0020
1	2004 . . .	2006 . . .	05P00620-0133	05P00620-0028
1.5	2006 . . .	2008 . . .	05P00620-0133	05P00620-0028
2	2008 . . .	2010 . . .	05P00620-0024	05P00620-0027
3	2010 . . .	2012 . . .	05P00620-0134	05P00620-0032

HP	Catalog Code GA80U . .		3% Output Reactor	
	Normal Duty	Heavy Duty	Open Type	Enclosed Type 1
			Part Number	Part Number
4	2012 . . .	2018 . . .	05P00620-0134	05P00620-0032
5	2018 . . .	2021 . . .	05P00620-0136	05P00620-0036
7.5	2021 . . .	2030 . . .	URX000083	05P00620-0041
10	2030 . . .	2042 . . .	05P00620-0044	05P00620-0046
15	2042 . . .	2056 . . .	05P00620-0140	05P00620-0050
20	2056 . . .	2070 . . .	05P00620-0143	05P00620-0058
25	2070 . . .	2082 . . .	05P00620-0143	05P00620-0058
30	2082 . . .	2110 . . .	05P00620-0143	05P00620-0058
40	2110 . . .	2138 . . .	URX000085	URX000204
50	2138 . . .	2169 . . .	05P00620-0064	05P00620-0066
60	2169 . . .	2211 . . .	05P00620-0069	URX000206
75	2211 . . .	2257 . . .	05P00620-0075	05P00620-0077
100	2257 . . .	2313 . . .	URX000175	URX000248
125	2313 . . .	2360 . . .	05P00620-0085	URX000249
150	2360 . . .	2415 . . .	URX000181	URX000250
150	2415 . . .	-	URX000181	URX000250

Table 27: 480 Volt AC Output Reactors

HP	Catalog Code GA80U . .		3% Output Reactor	
	Normal Duty	Heavy Duty	Open Type	Enclosed Type 1
			Part Number	Part Number
0.5	4002 . . .	4002 . . .	05P00620-0014	05P00620-0016
0.75	4002 . . .	4002 . . .	05P00620-0131	05P00620-0015
1	4002 . . .	4004 . . .	05P00620-0131	05P00620-0015
1.5	4004 . . .	4004 . . .	05P00620-0018	05P00620-0022
2	4004 . . .	4005 . . .	05P00620-0132	05P00620-0021
3	4005 . . .	4007 . . .	05P00620-0025	05P00620-0029
4	4007 . . .	4009 . . .	05P00620-0025	05P00620-0029
5	4009 . . .	4012 . . .	05P00620-0133	05P00620-0028
7.5	4012 . . .	4018 . . .	05P00620-0135	05P00620-0033
10	4018 . . .	4023 . . .	05P00620-0137	05P00620-0037
15	4023 . . .	4031 . . .	05P00620-0138	05P00620-0042
20	4031 . . .	4038 . . .	05P00620-0139	05P00620-0047
25	4038 . . .	4044 . . .	05P00620-0139	05P00620-0047
30	4044 . . .	4060 . . .	05P00620-0049	05P00620-0051
40	4060 . . .	4075 . . .	05P00620-0142	05P00620-0055
50	4075 . . .	4089 . . .	05P00620-0144	05P00620-0059

HP	Catalog Code GA80U . .		3% Output Reactor	
	Normal Duty	Heavy Duty	Open Type	Enclosed Type 1
			Part Number	Part Number
60	4089 . . .	4103 . . .	05P00620-0144	05P00620-0059
75	4103 . . .	4140 . . .	05P00620-0145	05P00620-0062
100	4140 . . .	4168 . . .	05P00620-0013	05P00620-0067
125	4168 . . .	4208 . . .	05P00620-0070	05P00620-0073
150	4208 . . .	4250 . . .	URX000586	05P00620-0078
200	4250 . . .	4302 . . .	URX000175	05P00620-0083
250	4302 . . .	4371 . . .	URX000179	05P00620-0088
300	4371 . . .	4414 . . .	URX000182	05P00620-0092
350	4414 . . .	4477 . . .	05P00620-0094	05P00620-0096
400	4477 . . .	4568 . . .	05P00620-0094	05P00620-0096
450	4568 . . .	4605 . . .	05P00620-0098	05P00620-0100
500	4605 . . .	4720 . . .	05P00620-0098	05P00620-0100
600	4720 . . .	4810 . . .	05P00620-0102	05P00620-0104
700	4810 . . .	4930 . . .	URX000230	URX000254
800	4930 . . .	4H11 . . .	URX000236	URX000244
900	4H11 . . .	4H12 . . .	URX000239	URX000246
1000	4H12 . . .	-	URX000239	URX000246

Table 28: 600 Volt AC Output Reactors

HP	Catalog Code GA80U . .		3% Output Reactor	
	Normal Duty	Heavy Duty	Open Type	Enclosed Type 1
			Part Number	Part Number
100	-	5125 . . .	05P00620-0145	05P00620-0062
125	5125 . . .	5144 . . .	05P00620-0013	05P00620-0067
150	5144 . . .	5192 . . .	05P00620-0070	05P00620-0073
200	5192 . . .	5242 . . .	URX000586	05P00620-0078
250	5242 . . .	5289 . . .	URX000176	05P00620-0083
300	5289 . . .	5382 . . .	URX000179	05P00620-0088
350	5382 . . .	5382 . . .	URX000182	05P00620-0092
400	5382 . . .	5412 . . .	URX000182	05P00620-0092
450	5412 . . .	5472 . . .	05P00620-0094	05P00620-0096
500	5472 . . .	-	05P00620-0094	05P00620-0096

EMC Input Filters



Install external EMC filters to the drive input to comply with C2 levels of the EN 61800-3 EMC directive.

Table 29: 240 Volt EMC Input Filters

Catalog Code GA80U . .	Input EMC Filter	
	Part Number	Figure #
2004 . . .	B84743A0008R176	15
2006 . . .		
2008 . . .	B84743A0017R176	16
2010 . . .		
2012 . . .		
2018 . . .	B84743A0033R176	
2021 . . .		
2030 . . .	B84743A0044R176	17
2042 . . .	B84743A0060R176	18
2056 . . .	B84243A6083Z000	19
2070 . . .	B84243A6120Z000	
2082 . . .		
2110 . . .		
2138 . . .	B84243A6180Z000	
2169 . . .		
2211 . . .	B84743A0300R176	20
2257 . . .		
2313 . . .	B84743B0410S176	21
2360 . . .		
2415 . . .		

Table 30: 480 Volt EMC Input Filters

Catalog Code GA80U . .	Input EMC Filter	
	Part Number	Figure #
4002 . . .	B84743A0008R176	15
4004 . . .		
4005 . . .		
4007 . . .	B84743A0017R176	16
4009 . . .		
4012 . . .		
4018 . . .	B84743A0033R176	
4023 . . .		
4031 . . .	B84743A0044R176	17
4038 . . .	B84743A0060R176	18
4044 . . .		
4060 . . .		
4075 . . .	B84243A6083Z000	19
4089 . . .	B84243A6120Z000	
4103 . . .		
4140 . . .	B84243A6180Z000	
4168 . . .		
4208 . . .	B84743A0300R176	20
4250 . . .		
4302 . . .		
4371 . . .	B84743B0410S176	21
4414 . . .		
4477 . . .	Consult Factory	-
4568 . . .		
4605 . . .		
4720 . . .		
4810 . . .		
4930 . . .		
4H11 . . .		
4H12 . . .		

Open Type DC Bus Reactor Dimensions

Figure 4:

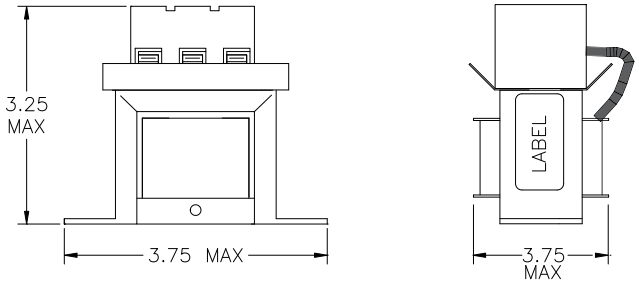

Figure 5:

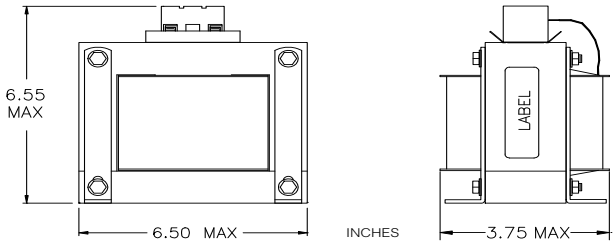

Figure 6:

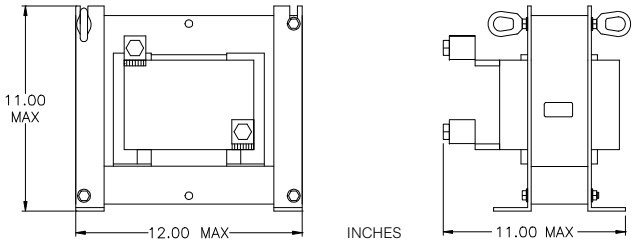

Table 31: Open Type Reactor Dimensions

DC Bus Reactor	Figure	DC Bus Reactor	Figure
05P00608-3007	4	URX000048	5
05P00620-0109	4	URX000049	5
05P00620-0110	4	URX000051	5
05P00620-0111	5	URX000052	5
05P00620-0115	4	URX000054	5
05P00620-0120	4	URX000055	5
05P00620-0129	6	URX000056	5
05P00652-0213	5	URX000057	5
05P00652-0216	5	URX000058	5
URX000033	4	URX000059	5
URX000034	4	URX000060	5
URX000036	4	URX000061	5
URX000037	4	URX000062	6
URX000038	4	URX000063	6
URX000039	4	URX000064	6
URX000041	5	URX000069	6
URX000042	5	URX000072	6
URX000044	5	URX000073	6
URX000046	5	URX000371	5

Enclosed DC Reactor Dimensions

Figure 7: CAB-8

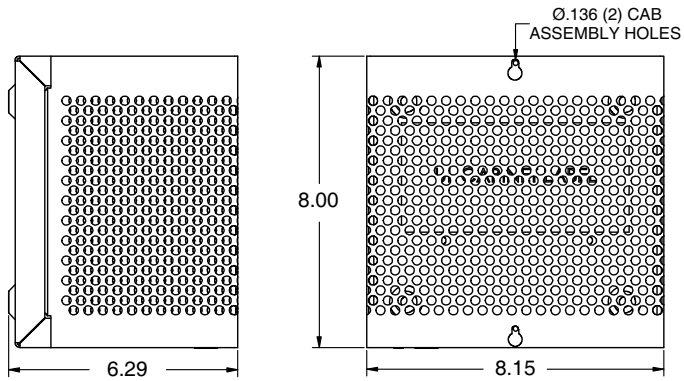

UNITS: INCHES

Figure 8: CAB-13V

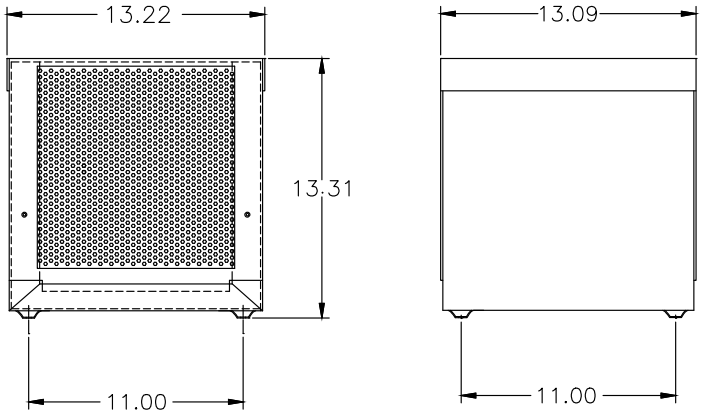

UNITS: INCHES

Table 32: Enclosed Type Reactor Dimensions

DC Bus Reactor	Figure
URX000207	7
URX000208	
URX000209	
URX000210	
URX000211	
URX000213	8
URX000215	
URX000216	7
URX000217	
URX000218	
URX000219	
URX000221	8
URX000222	
URX000223	
URX000224	
URX000225	
URX000260	
URX000263	
URX000265	

AC Open Reactor Dimensions

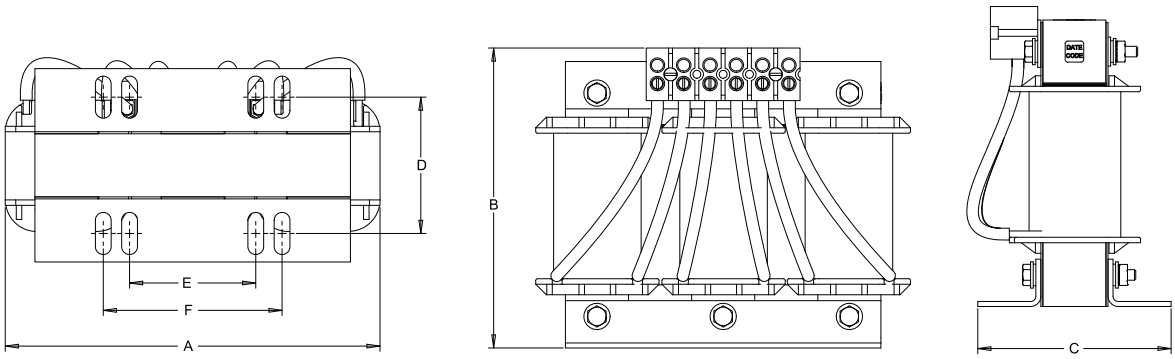

Table 33: AC Open Reactor Dimensions

Open Type Reactor Part number	Watt Loss	Dimensions (mm/in)						Weight
		A	B	C	D	E	F	kg/lb
05P00620-0013	180	229/9	183/7.2	172/6.8	93/3.66	92/3.63	-	28/62
05P00620-0014	11.3	112/4.4	104/4.1	71/2.8	50/1.98	37/1.44	-	1.8/4
05P00620-0017	14.5	112/4.4	104/4.1	71/2.8	50/1.98	37/1.44	-	1.8/4
05P00620-0018	20	112/4.4	104/4.1	86/3.4	60/2.35	37/1.44	-	2.3/5
05P00620-0024	19.5	152/6.0	122/4.8	76/3.0	53/2.10	51/2.00	-	3.2/7
05P00620-0025	25.3	152/6.0	122/4.8	86/3.4	67/2.62	51/2.00	-	5.0/11
05P00620-0044	49	183/7.2	147/5.8	102/4.0	66/2.60	76/3.00	-	6.4/14
05P00620-0049	62	229/9.0	188/7.4	119/4.7	80/3.16	76/3.00	-	13/28
05P00620-0064	108	229/9.0	179/7.1	118/4.7	80/3.16	76/3.00	-	13/29
05P00620-0069	116	229/9	183/7.2	172/6.8	80/3.16	92/3.63	-	19/42
05P00620-0070	149	274/10.8	277/8.3	152/6	88/3.47	92/3.63	-	23/51
05P00620-0075	124	229/9	191/7.5	185/7.3	106/4.16	92/3.63	-	22/49
05P00620-0080	154	229/9	191/7.5	229/9	106/4.16	92/3.63	-	31/68
05P00620-0085	224	274.3/10.8	213.4/8.4	200.7/7.9	131/5.2	117/4.6	-	36.3/80
05P00620-0088	224	275/11	214/8.5	201/8	131/5.2	117/4.6	-	36/80
05P00620-0090	333	381/15	286/11.3	292/11.5	172/6.76	117/4.60	-	71/155
05P00620-0094	340	366/14.4	292/11.5	292/11.5	172/6.76	117/4.60	-	82/180
05P00620-0098	414	366/14.4	286/11.3	305/12	203/8.00	117/4.60	-	114/250
05P00620-0102	630	366/14.4	292/11.5	318/12.5	204/8.01	183/7.20	-	141/310
05P00620-0131	7.5	112/4.4	104/4.1	71/2.8	50/1.98	37/1.44	-	1.8/4
05P00620-0132	20	112/4.4	104/4.1	71/2.8	50/1.98	37/1.44	-	1.8/4
05P00620-0133	29	152/6.0	122/4.8	76/3.0	53/2.10	51/2.00	-	3.6/8
05P00620-0134	26	152/6.0	127/5.0	84/3.3	53/2.10	51/2.00	-	4.1/9
05P00620-0135	31	152/6.0	127/5.0	84/3.3	53/2.10	51/2.00	-	4.5/10
05P00620-0136	36	152/6.0	135/5.3	81/3.2	54/2.10	51/2.00	-	4.1/9

Open Type Reactor Part number	Watt Loss	Dimensions (mm/in)						Weight
		A	B	C	D	E	F	kg/lb
05P00620-0137	43	152/6.0	135/5.3	89/3.5	63/2.48	51/2.00	-	5.5/12
05P00620-0138	52	183/7.2	147/5.8	89/3.5	60/2.35	76/3.00	-	6.4/14
05P00620-0139	54	183/7.2	147/5.8	102/4.0	70/2.75	76/3.00	-	7.3/16
05P00620-0140	54	229/9.0	188/7.4	119/4.7	80/3.16	76/3.00	-	10/23
05P00620-0142	67	229/9.0	178/7.0	135/5.3	80/3.16	76/3.00	-	12/27
05P00620-0143	82	229/9	183/7.2	160/6.3	88/3.47	92/3.63	-	20/43
05P00620-0144	86	229/9	183/7.2	165/6.5	88/3.47	92/3.63	-	23/51
05P00620-0145	84	229/9	185/7.3	173/6.8	93/3.66	92/3.63	-	23/51
05P00620-0147	231	274/10.8	216/8.5	229/9	131/5.16	117/4.60	-	48/106
05P00620-0148	264	274/10.8	229/9	254/10	149/5.88	117/4.60	-	57/125
URX000083	48	183/7.2	147/5.8	89/3.5	60/2.35	76/3.00	-	5.0/11
URX000085	94	229/9	185/7.3	165/6.5	88/3.46	92/3.62	-	21/47
URX000175	154	243.8/9.6	177.8/7	205.7/8.1	106/4.2	92/3.63	-	21.3/47
URX000176	231	274.3/10.8	215.9/8.5	193/7.6	131/5.2	117/4.6	-	36.3/80
URX000179	264	274.3/10.8	213.4/8.4	226.1/8.9	149/5.9	117/4.6	-	46.3/102
URX000181	213	280/11	214/8.5	219/8.6	131/5.2	117/4.6	-	38/84
URX000182	571	363.2/14.3	281.9/11.1	238.8/9.4	172/6.8	117/4.6	-	53.5/118
URX000230	930	452.1/17.8	393.7/15.5	393.7/15.5	-	-	182.9/7.2	97.5/215
URX000236	1080	431.8/17	370.8/14.6	373.4/14.7	-	-	182.9/7.2	97.5/215
URX000239	1270	431.8/17	378.5/14.9	411.5/16.2	-	-	182.9/7.2	124.7/275
URX000284	7.8	114/4.5	94/3.7	38/1.5	0/0	102/4	-	0.7/1.6
URX000285	10.1	114/4.5	94/3.7	38/1.5	0/0	102/4	-	0.7/1.6
URX000286	11.9	114/4.5	94/3.7	38/1.5	0/0	102/4	-	0.8/1.7
URX000287	6.9	114/4.5	94/3.7	38/1.5	0/0	102/4	-	0.7/1.5
URX000288	10.9	114/4.5	94/3.7	38/1.5	0/0	102/4	-	0.7/1.6
URX000289	15	114/4.5	94/3.7	38/1.5	0/0	102/4	-	0.7/1.6
URX000292	14.3	114/4.5	94/3.7	38/1.5	0/0	102/4	-	0.7/1.6
URX000293	19.6	114/4.5	94/3.7	38/1.5	0/0	102/4	-	0.8/1.7
URX000295	12.3	114/4.5	94/3.7	38/1.5	0/0	102/4	-	0.7/1.6
URX000296	19.6	114/4.5	94/3.7	38/1.5	0/0	102/4	-	0.7/1.6
URX000297	26.5	112/4.4	127/5	71/2.8	51/2	36/1.4	-	1.2/2.7
URX000299	13.8	114/4.5	94/3.7	38/1.5	0/0	102/4	-	0.8/1.7
URX000300	23	114/4.5	94/3.7	38/1.5	0/0	102/4	-	0.8/1.8
URX000301	37.5	112/4.4	127/5	71/2.8	51/2	36/1.4	-	1.3/2.8
URX000303	19.2	114/4.5	94/3.7	38/1.5	0/0	102/4	-	0.8/1.8
URX000304	37.2	112/4.4	127/5	71/2.8	51/2	36/1.4	-	1.3/2.8
URX000305	47.8	112/4.4	127/5	79/3.1	53/2.1	36/1.4	-	1.9/4.1
URX000306	53.8	112/4.4	127/5	79/3.1	53/2.1	36/1.4	-	1.9/4.2
URX000307	26.8	112/4.4	127/5	71/2.8	51/2	36/1.4	-	1.2/2.7
URX000308	40.9	112/4.4	127/5	79/3.1	53/2.1	36/1.4	-	1.9/4.2

Open Type Reactor Part number	Watt Loss	Dimensions (mm/in)						Weight
		A	B	C	D	E	F	kg/lb
URX000309	54.4	112/4.4	127/5	89/3.5	66/2.6	36/1.4	-	2.4/5.3
URX000311	32.7	112/4.4	135/5.3	71/2.8	51/2	36/1.4	-	1.3/2.8
URX000312	48.2	112/4.4	127/5	79/3.1	53/2.1	36/1.4	-	2/4.3
URX000313	60.6	152/6	147/5.8	74/2.9	53/2.1	51/2	-	3.2/7.1
URX000315	38.3	112/4.4	135/5.3	84/3.3	61/2.4	36/1.4	-	1.9/4.2
URX000316	57.4	152/6	155/6.1	74/2.9	0/0	102/4	-	3.3/7.2
URX000317	73.5	152/6	155/6.1	84/3.3	0/0	102/4	-	4.5/10
URX000319	48.2	112/4.4	135/5.3	89/3.5	0/0	102/4	-	2.3/5.1
URX000320	66.8	152/6	155/6.1	84/3.3	0/0	102/4	-	4.3/9.5
URX000321	93.8	152/6	155/6.1	84/3.3	0/0	102/4	-	4.7/10.4
URX000324	102	183/7.2	152/6	95/3.8	0/0	102/4	-	5.9/13
URX000325	121	183/7.2	152/6	109/4.3	0/0	102/4	-	8.2/18
URX000326	77	183/7.2	152/6	95/3.75	0/0	102/4	-	5.9/13
URX000327	99	183/7.2	152/6	109/4.3	0/0	102/4	-	7.7/17
URX000328	179	229/9	211/8.3	122/4.8	0/0	102/4	108/4.26	10.9/24
URX000330	109	229/9	211/8.3	130/5.1	0/0	102/4	-	9.1/20
URX000332	87	183/7.2	152/6	102/4	0/0	102/4	-	8.2/18
URX000333	105	183/7.2	152/6	109/4.3	0/0	102/4	-	43395
URX000335	119	183/7.2	152/6	109/4.3	0/0	102/4	-	8.6/19
URX000336	155	229/9	178/7	165/6.5	0/0	102/4	108/4.26	11.8/26
URX000338	94	183/7.2	152/6	165/6.5	70/2.75	76/3	108/4.26	43395
URX000339	200	229/9	178/7	178/7	82/3.24	76/3	108/4.26	12.7/28
URX000341	132	235/9.25	191/7.5	171/6.75	83/3.25	76/3	108/4.26	11.8/26
URX000342	152	235/9.25	191/7.5	171/6.75	95/3.75	76/3	108/4.26	16.8/37
URX000344	110	235/9.25	191/7.5	171/6.75	95/3.75	76/3	108/4.26	15.4/34
URX000345	195	235/9.25	191/7.5	210/8.25	121/4.75	76/3	108/4.26	22.2/49
URX000347	159	235/9.25	191/7.5	178/7	10/0.375	76/3	108/4.26	15.4/34
URX000348	224	235/9.25	191/7.5	210/8.25	121/4.75	76/3	108/4.26	22.2/49
URX000350	275	235/9.25	191/7.5	191/7.5	95/3.75	76/3	108/4.26	15.9/35
URX000351	284	235/9.25	191/7.5	216/8.5	121/4.75	76/3	108/4.26	24.9/55
URX000354	383	274/10.8	222/8.75	216/8.5	136/5.37	92/3.63	142/5.58	34.5/76
URX000355	494	274/10.8	213/8.4	277/10.9	188/7.4	91/3.6	142/5.6	49/108
URX000356	333	229/9	222/8.75	241/9.5	136/5.37	92/3.63	142/5.58	35.4/78
URX000357	531	229/9	222/8.75	292/11.5	174/6.87	92/3.63	142/5.58	44.4/98
URX000360	496	229/9	222/8.75	305/12	162/6.37	92/3.63	142/5.58	53.5/118
URX000363	747	366/14.4	292/11.5	318/12.5	206/8.12	117/4.6	150/5.9	65.3/144
URX000366	838	366/14.4	292/11.5	318/12.5	194/7.62	117/4.6	183/7.2	81.2/179
URX000586	168	229/9	191/7.5	211/8.3	112/4.41	92/3.63	-	31/67
URX000587	224	274/10.8	229/9	277/8.3	131/5.16	117/4.60	-	50/110
URX000588	231	274/10.8	254/10	254/10.0	131/5.16	117/4.60	-	46/100

AC Enclosed Reactor Dimensions

Figure 9: CAB-8

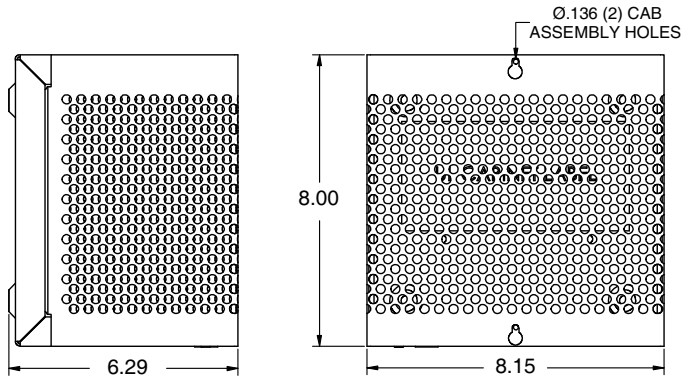

UNITS: INCHES

Figure 10: CAB-13V

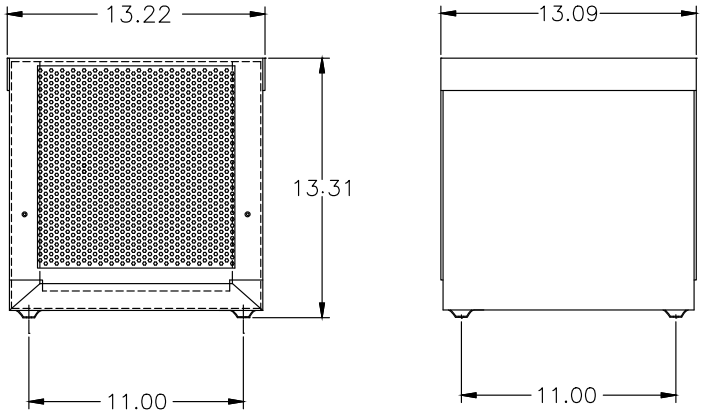

UNITS: INCHES

Figure 11: CAB-17V

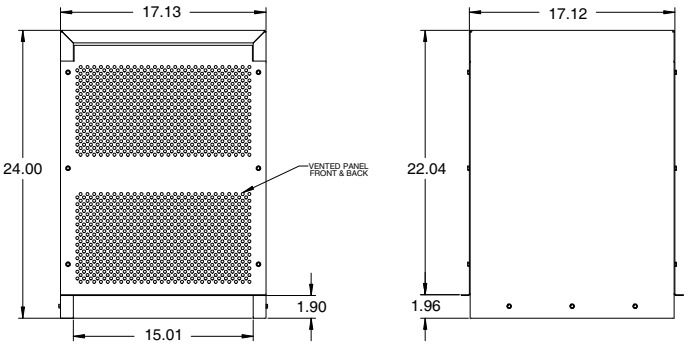

UNITS: INCHES

Figure 12: CAB-26C

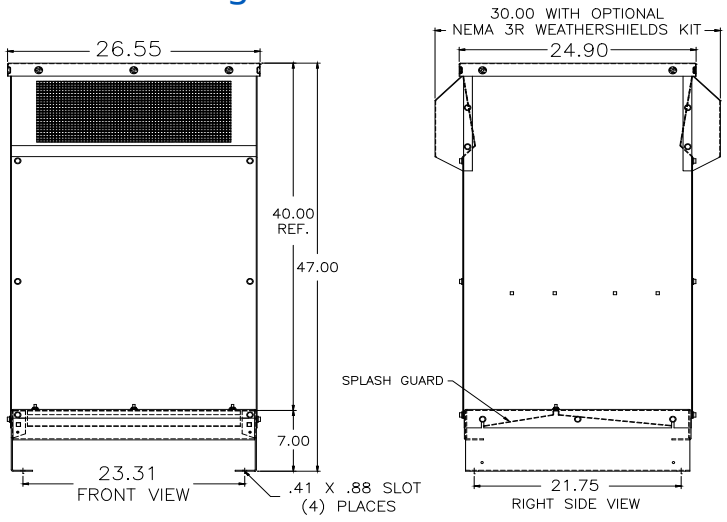

UNITS: INCHES

Figure 13: CAB-30B

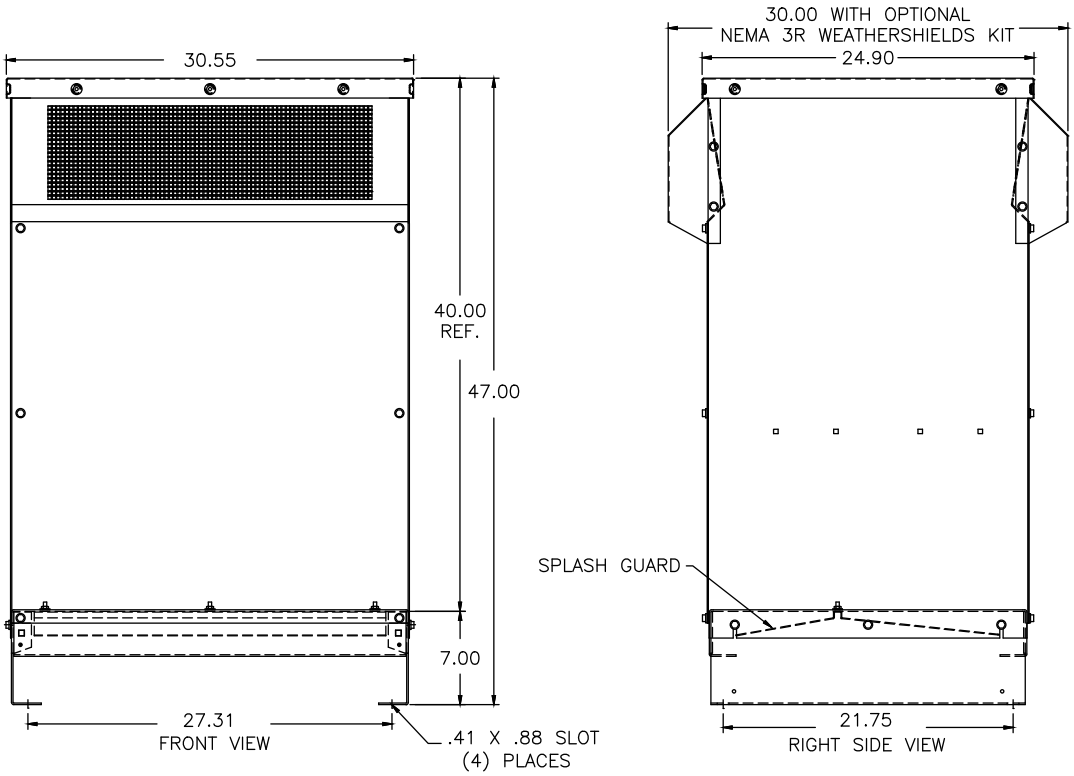

UNITS: INCHES

Figure 14: CAB-26D

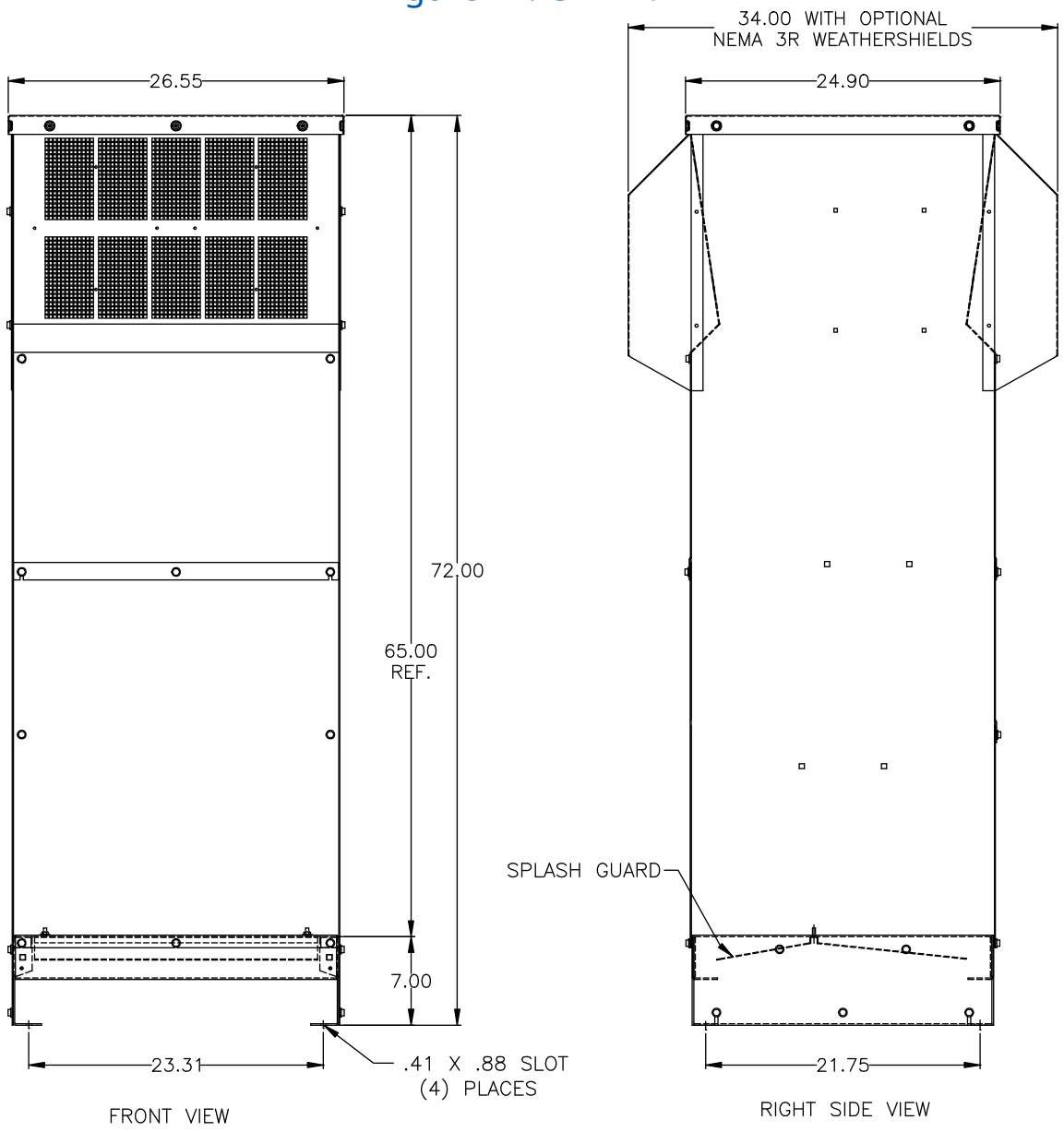

Table 34: AC Input/Output Enclosed Reactor Specifications

Enclosed Type 1 Reactor Part number	Cabinet Reference (Figure)	Weight
		kg/lb
05P00620-0015	9	5/11
05P00620-0016		5/11
05P00620-0020		5/11
05P00620-0021		5/11
05P00620-0022		5/12
05P00620-0027		6/14
05P00620-0028		7/15
05P00620-0029		8/18
05P00620-0032		7/16
05P00620-0033		8/17
05P00620-0036		7/16
05P00620-0037		9/19
05P00620-0041	10	13/23
05P00620-0042		15/32
05P00620-0046		15/32
05P00620-0047		16/34
05P00620-0050		19/41
05P00620-0051		21/46
05P00620-0055		20/45
05P00620-0058		20/43
05P00620-0059		23/51
05P00620-0062		32/51
05P00620-0066		21/47
05P00620-0067		28/61
05P00620-0073		31/68
05P00620-0077		25/56
05P00620-0078		33/72
05P00620-0083	11	49/107
05P00620-0088		59/129
05P00620-0092		66/145
05P00620-0096	12	119/262
05P00620-0100		145/319
05P00620-0104	13	158/349
URX000204	10	21/47
URX000206		27/59
URX000244	14	141/310
URX000246		164/361
URX000248	10	30/65
URX000249	11	49/107
URX000250		50/111

Enclosed Type 1 Reactor Part number	Cabinet Reference (Figure)	Weight
		kg/lb
URX000254	14	164/361
URX000409	9	3.9/8.6
URX000410		3.9/8.7
URX000411	9	4.0/8.8
URX000412		5.1/11.2
URX000413		4.4/9.7
URX000414		5.1/11.2
URX000415		4.4/9.8
URX000416		5.1/11.3
URX000417		6.4/14.1
URX000418	10	10/22.2
URX000419		11/25.2
URX000420		10/23.1
URX000421		12/27.5
URX000423		14/31
URX000424		14/31
URX000425		16/35
URX000426		16/36
URX000427		17/37
URX000428		14/40
URX000429		20/44
URX000430		24/52
URX000431	11	28/61
URX000432		28/62
URX000434	12	101/222
URX000502	9	3.9/8.6
URX000503		4.0/8.8
URX000504		4.4/9.8
URX000505		5.6/12.3
URX000551		3.9/8.6
URX000552		4.4/9.8
URX000553	10	17/38
URX000554		18/40
URX000555		20/44
URX000556		21/46
URX000557		25/55
URX000558		30/67
URX000559	11	34/76
URX000560		37/82

Enclosed Type 1 Reactor Part number	Cabinet Reference (Figure)	Weight
		kg/lb
URX000561	12	100/220
URX000562		110/242
URX000563		119/262
URX000564		131/288
URX000565	12	147/323
URX000568	10	13/28
URX000569	9	3.9/8.7
URX000570		3.9/8.6
URX000571		3.9/8.6
URX000572		3.9/8.7
URX000573		4.4/9.7
URX000574		5/11.1
URX000575	10	13/28.4
URX000576		16/36
URX000577		19/42
URX000583	9	3.9/8.5
URX000584		3.9/8.6
URX000585		3.9/8.6

EMC Input Filter Dimensions

All dimensions are in millimeters (mm).

Figure 15: 8 Amp Filter

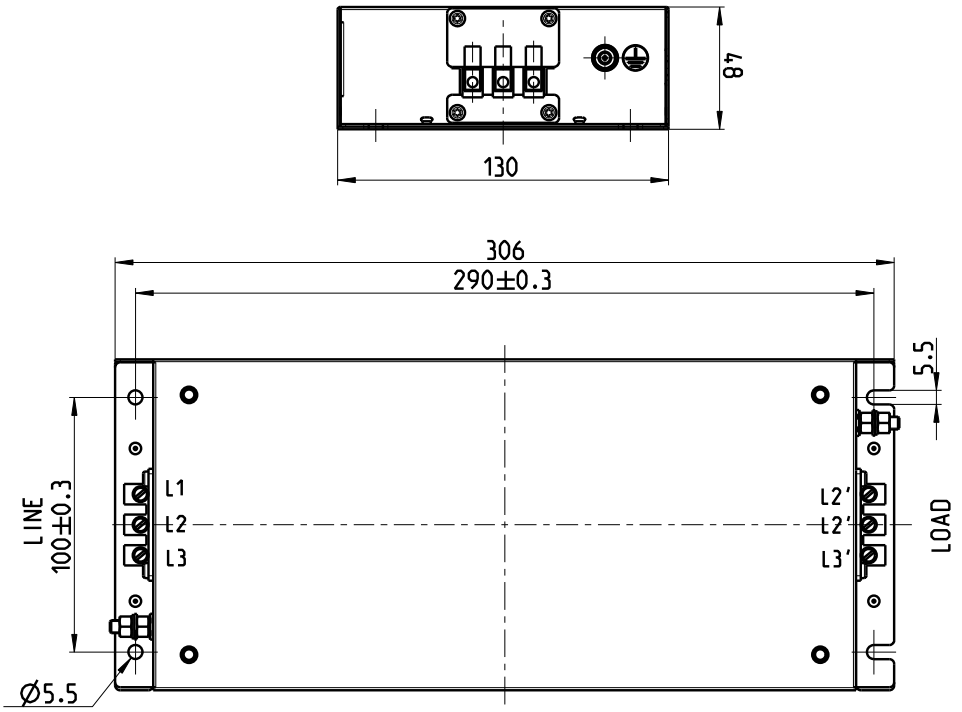

Figure 16: 17 - 33 Amp Filter

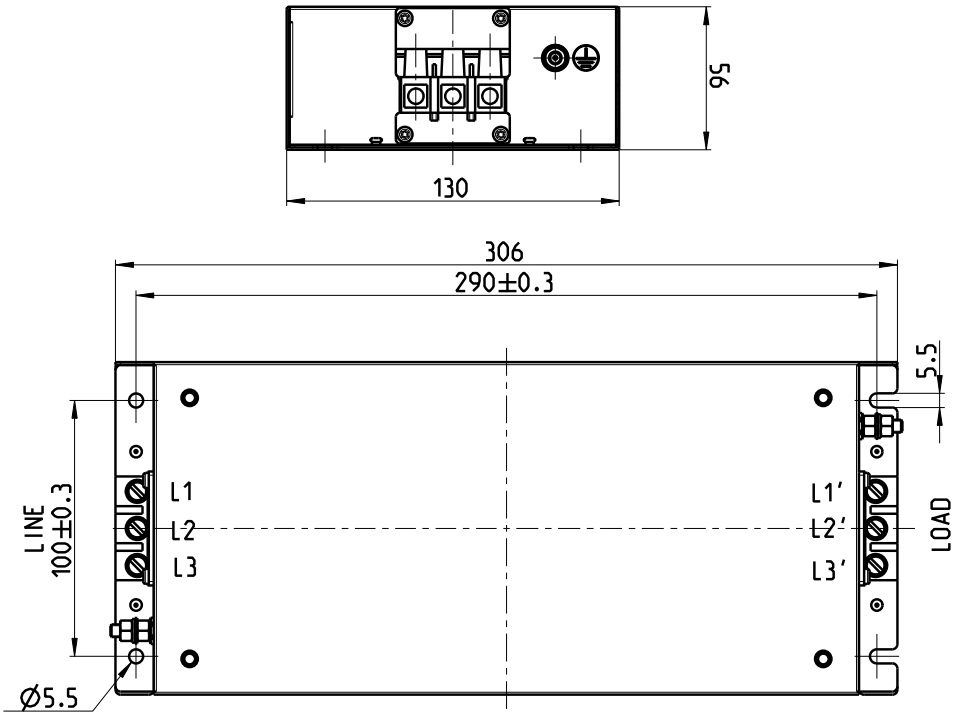

Figure 17: 44 Amp Filter

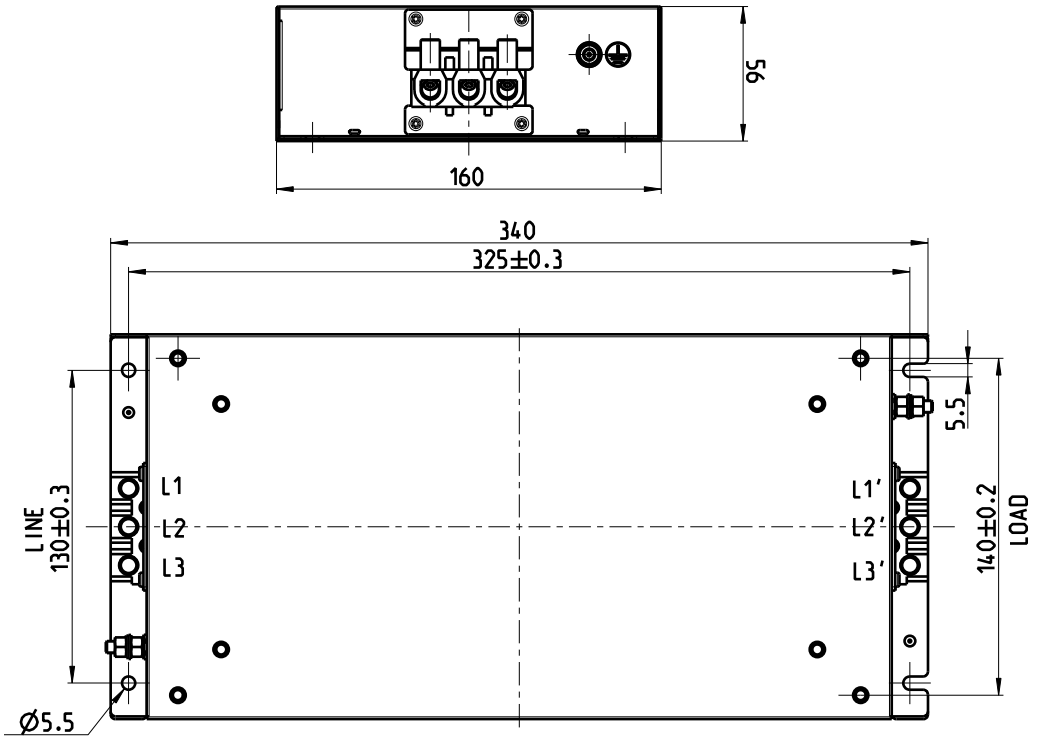

Figure 18: 60 Amp Filter

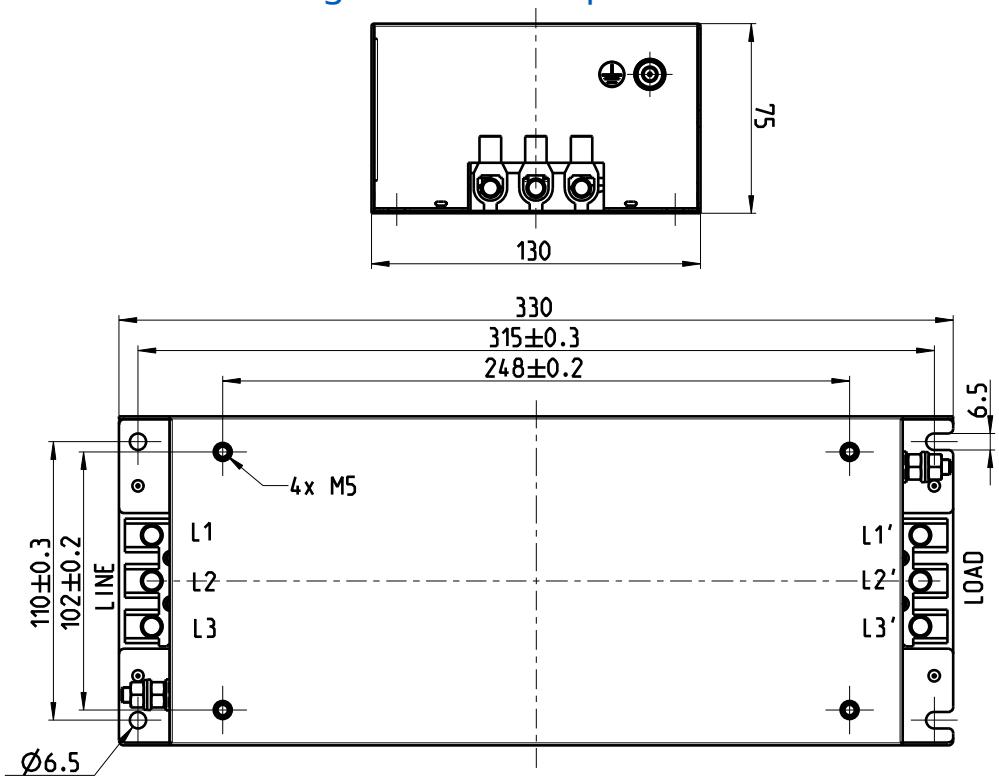

Figure 19: 83 - 180 Amp Filter

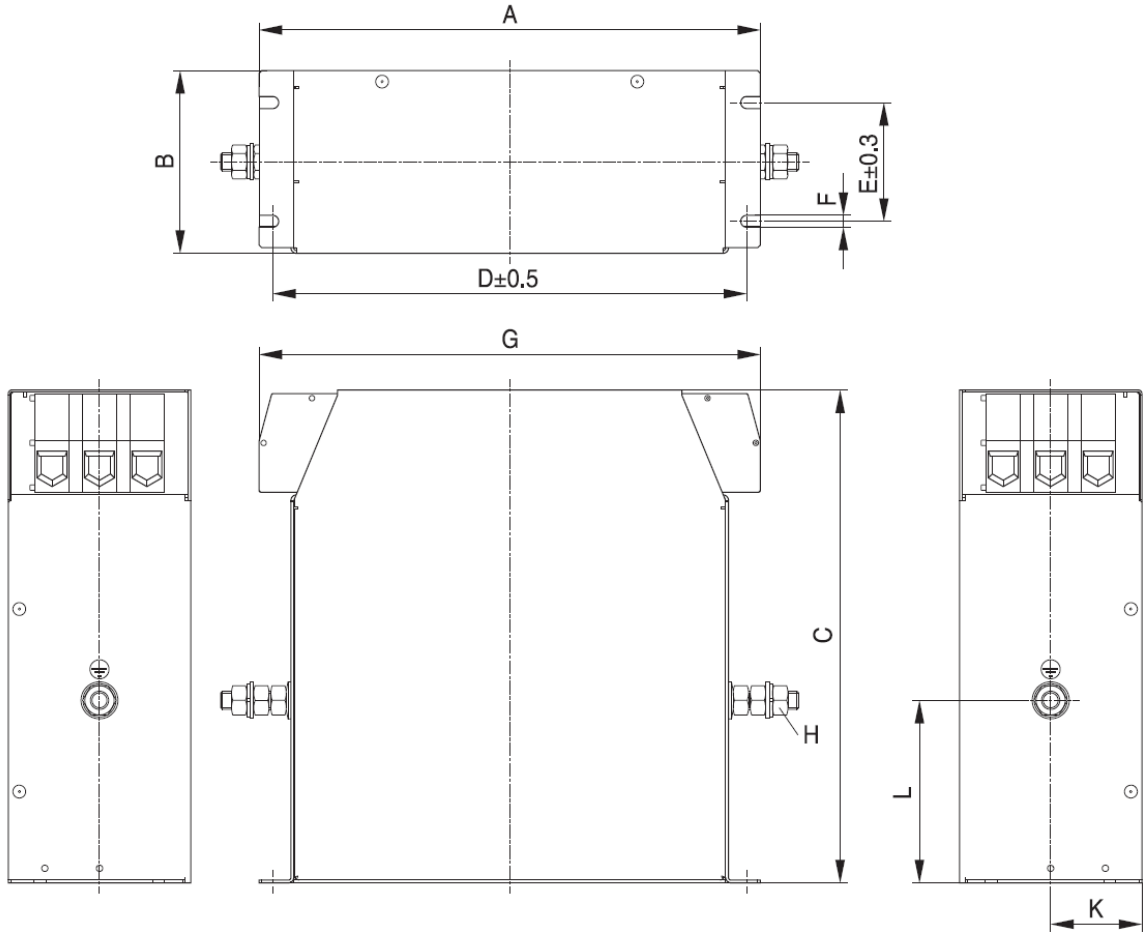

Amp Rating	Dimensions (mm)									
	A	B	C	D	E	F	G	H	K	L
83	270	80	185	255	60	6.5	270	M8	40	80
120	270	105	190	255	65	6.5	270	M10	52.5	100
180	380	120	210	365	102	6.5	3.79	M10	60	30

Figure 20: 300 Amp Filter

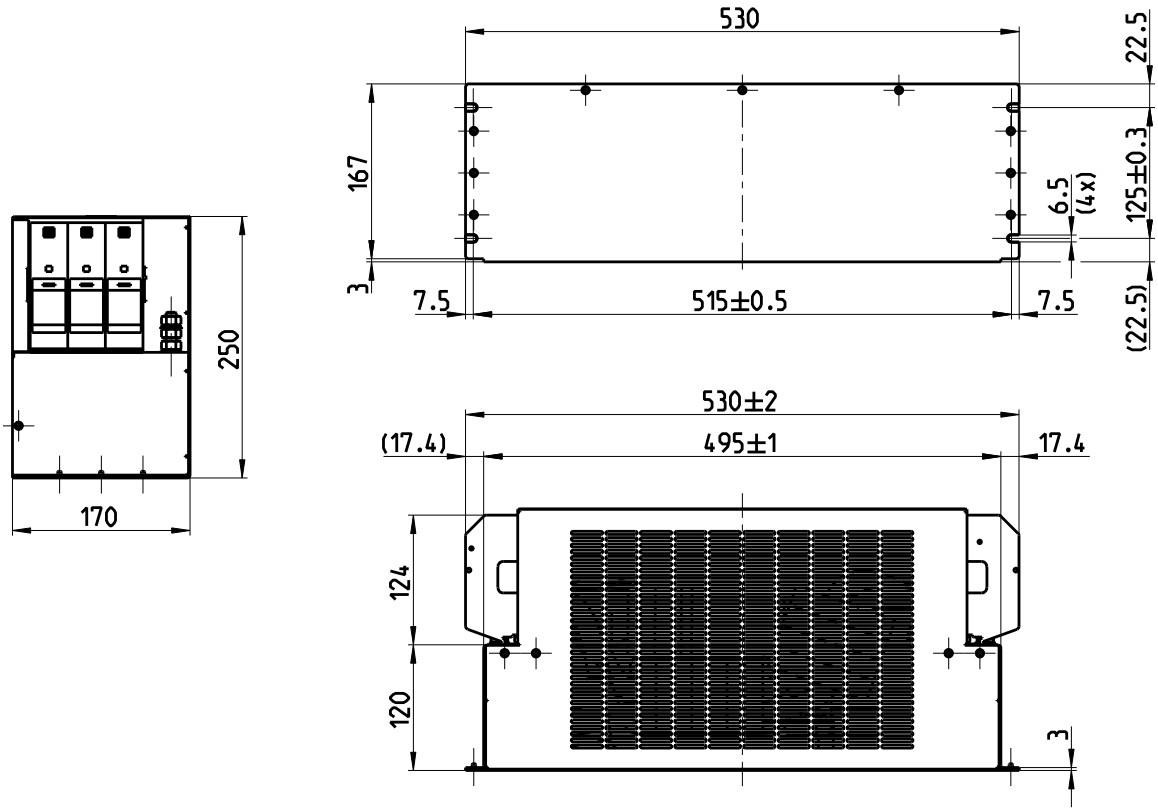

Figure 21: 410 Amp Filter

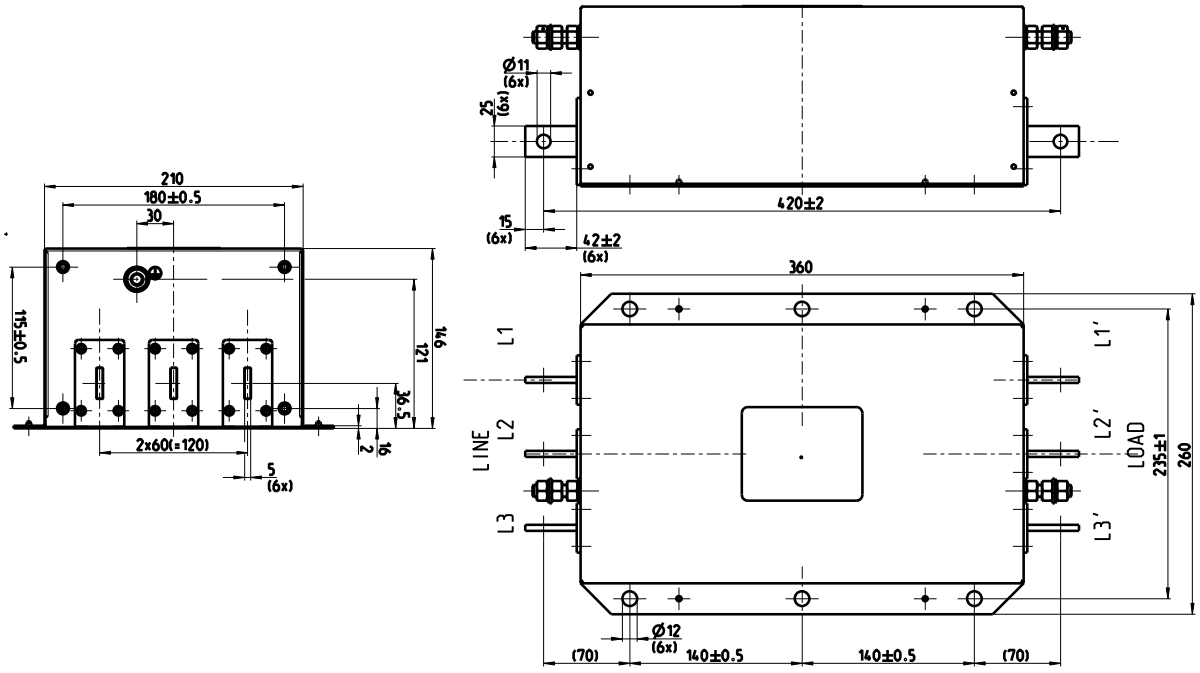

Dynamic Braking



Additional Information	
Braking Resistors	Braking Resistor Drawings

3% Dynamic Braking Options

3% Duty cycle resistors are rated for a 3% duty cycle at 100-second intervals.

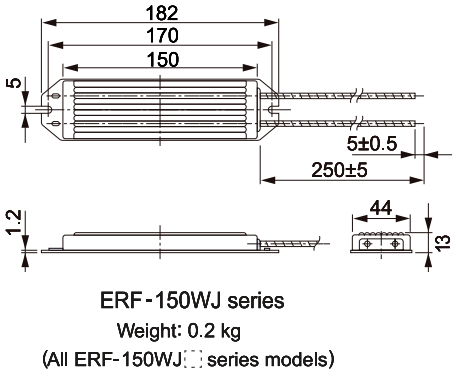

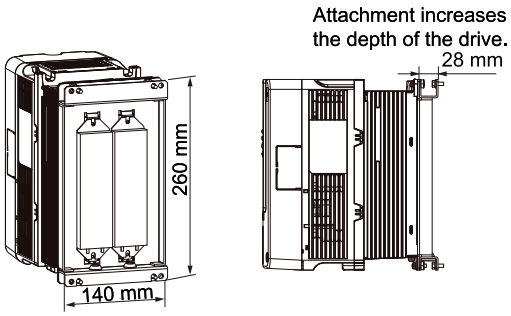

Table 35: 240 Volt 3% Dynamic Braking Options

Normal Duty HP	Heavy Duty HP	Catalog Code GA80U . .	Resistor	
			Part Number	Quantity
1	0.75	2004. . .	R7506	1
1.5	1	2006. . .	R7505	1
2	1.5	2008. . .	R7504	1
3	2	2010. . .	R7504	1
4	3	2012. . .	R7510	1
5	4	2018. . .	R7510	1
7.5	5	2021. . .	R7510	2

Table 36: 480 Volt 3% Dynamic Braking Options

Normal Duty HP	Heavy Duty HP	Catalog Code GA80U . .	Resistor	
			Part Number	Quantity
1	0.75	4002. . .	R7508	1
2	1.5	4004. . .	R7507	1
3	2	4005. . .	R7505	1
4	3	4007. . .	R7505	1
5	4	4009. . .	R7505	1
7.5	5	4012. . .	R7504	1

Table 37: Resistor Mounting Adapters

Catalog Code GA80U . .	Mounting Bracket
	Part Number
2004ABM	900-192-126-001
2006ABM	
2008ABM	
2010ABM	
2012ABM	
2018ABM	
2021ABM	
2030ABM	
2042ABM	
4002ABM	
4004ABM	
4005ABM	
4007ABM	
4009ABM	
4012ABM	
4018ABM	
4023ABM	
240 and 480 V models use the same mounting bracket	



Resistor Mounting Adapter

10% Dynamic Braking Options

Dynamic Braking Resistor, 10% Duty Cycle - rated for 10% duty cycle over a 100-second interval. The resistors will achieve a minimum 150% peak braking torque for heavy duty horsepower ratings and a minimum of 100% peak braking power for normal duty horsepower ratings. 3% Duty cycle resistors are rated for a 3% duty cycle at 100-second intervals. These resistors are designed for separate panel mounting.

Table 38: 240 Volt 10% Duty Cycle Options

Normal Duty HP	Heavy Duty HP	Catalog Code GA80U . .	10 % Dynamic Braking Option (maximum 10-second on-time)				
			Transistor Module		Resistor		
			Part Number	Quantity	Part Number	Quantity	Enclosure
0.75	0.75	2004. . .	Built-in		URS000275	1	GCE1
1.5	1	2006. . .			URS000276	1	GCE1
2	1.5	2008. . .			URS000277	1	GCE1
3	2	2010. . .			URS000278	1	GCE1
4	3	2012. . .			URS000279	1	GCE1
5	4	2018. . .			URS000368	1	GCE1
7.5	5	2021. . .			URS000280	1	GCE2
10	7.5	2030. . .			URS000269	1	GCE2
15	10	2042. . .			URS000282	1	GCE3
20	15	2056. . .			URS000369	1	GCE4
25	20	2070. . .			URS000370	1	GCE6
30	25	2082. . .[1]			URS000371	1	GCE6
40	30	2110. . .			URS000372	1	GCE6
50	40	2138. . .[1]			URS000373	1	GCE9
60	50	2169. . .	CDBR-21100D	1	URS000100	1	GCE9
75	60	2211. . .	CDBR-21100D	1	URS000100	1	GCE9
100	75	2257. . .	CDBR-21100D	1	URS000096	1	GCE12
125	100	2313. . .	CDBR-21100D	1	URS000096	1	GCE12
			CDBR-20220D	1	URS000128	1	GCE6
150	125	2360. . .	CDBR-21100D	1	URS000096	1	GCE12
			CDBR-20220D	2	URS000129	1	GCE8
150	150	2415. . .	CDBR-21100D	2	URS000097	1	GCE24

1. The resistor used for 2082 and 2138 models achieves a minimum of 125% peak braking torque for heavy duty horsepower ratings and a minimum of 100% peak braking power for normal duty horsepower ratings.

Table 39: 480 Volt 10% Duty Cycle Options

Normal Duty HP	Heavy Duty HP	Catalog Code GA80U . .	10% Dynamic Braking Option (maximum 10 second on-time)				
			Transistor Module		Resistor		
			Part Number	Quantity	Part Number	Quantity	Enclosure
1	0.75	4002. . .	Built-in		URS000374	1	GCE1
2	1.5	4004. . .			URS000241	1	GCE1
3	2	4005. . .			URS000253	1	GCE1
4	3	4007. . .			URS000254	1	GCE1
5	4	4009. . .			URS000375	1	GCE1
7.5	5	4012. . .			URS000255	1	GCE2
10	7.5	4018. . .			URS000256	1	GCE3
15	10	4023. . .			URS000257	1	GCE3
20	15	4031. . .			URS000258	1	GCE4
25	20	4038. . .			URS000259	1	GCE6
30	25	4044. . .			URS000376	1	GCE6
40	30	4060. . .			URS000377	1	GCE8
50	40	4075. . .			URS000378	1	GCE6
60	50	4089. . .			URS000379	1	GCE9
75	60	4103. . .			URS000380	1	GCE12
100	75	4140. . .			URS000381	1	GCE15
125	100	4168. . .			URS000382	1	GCE18
150	125	4208. . .	CDBR-42200D	1	URS000119	1	GCE18
200	150	4250. . .	CDBR-42200D	1	URS000165	1	GCE24
250	200	4302. . .	CDBR-42200D	1	URS000165	1	ED2
			CDBR-40450D	1	URS000142	1	GCE6
300	250	4371. . .	CDBR-42200D	1	URS000165	1	GCE24
			CDBR-40450D	2	URS000143	1	GCE18
350	300	4414. . .	CDBR-42200D	2	URS000166	1	ED3
400	350	4477. . .	CDBR-42200D	2	URS000166	1	ED3
450	400	4568. . .	CDBR-42200D	2	URS000120	1	ED2
			CDBR-42200D	1	URS000165	1	GCE24
500	450	4605. . .	CDBR-42200D	3	URS000167	1	ED4
600	500	4720. . .	CDBR-42200D	3	URS000167	1	ED4
700	600	4810. . .	CDBR-42200D	4	URS000166	2	ED4
800	700	4930. . .	CDBR-42200D	6	URS000167	2	ED4
900	800	4H11. . .	CDBR-42200D	6	URS000167	2	ED4
1000	900	4H12. . .	CDBR-42200D	6	URS000167	2	ED4

Table 40: 600 Volt 10% Duty Cycle TrOptions

Normal Duty HP	Heavy Duty HP	Catalog Code GA80U . .	10% Dynamic Braking Option (max 10 second on-time)				
			Transistor Module		Resistor		
			Part Number	Quantity	Part Number	Quantity	Enclosure
125	100	5125 . . .	CDBR-53000D	1	URS000163	1	GCE24
150	125	5144 . . .	CDBR-53000D	1	URS000125	1	GCE24
200	150	5192 . . .	CDBR-53000D	1	URS000122	1	GCE30
250	200	5242 . . .	CDBR-53000D	2	URS000163	2	GCE24
300	250	5289 . . .	CDBR-53000D	2	URS000125	2	GCE24
350	300	5382 . . .	CDBR-53000D	2	URS000125	2	GCE24
400	350	5382 . . .	CDBR-53000D	2	URS000123	1	ED4
450	400	5412 . . .	CDBR-53000D	2	URS000123	1	ED4
500	450	5472 . . .	CDBR-53000D	2	URS000123	1	ED4
			CDBR-53000D	1	URS000118	1	GCE18

Enclosure Dimension Drawings	
DD.GCE.01	DD.ED.01

Figure 22: ED Type Enclosure

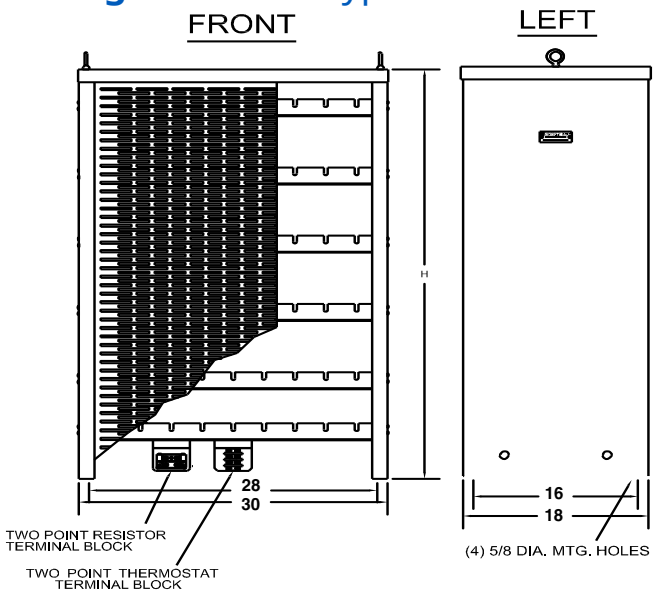

Table 41: ED Type Enclosure Dimensions

Enclosure Size	Dimensions (in)
	Height
ED2	16
ED3	24
ED4	32

Figure 23: GCE Type Enclosure

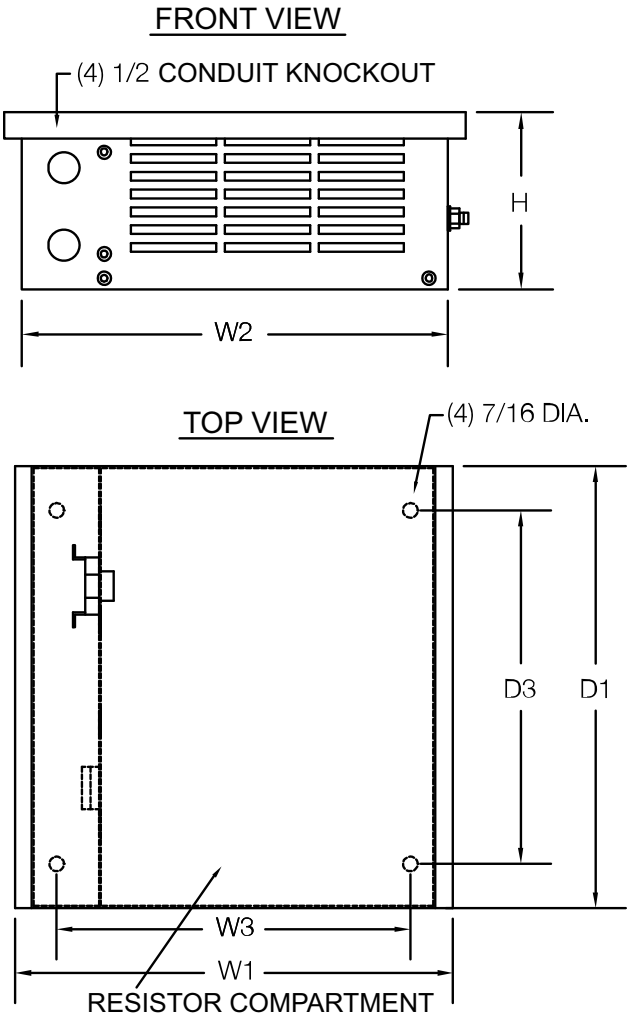

Table 42: GCE Type Enclosure Dimensions

Enclosure Size	Dimensions (in)						
	W1	W2	W3	D1	D2	D3	H
GCE1	12.5	12	10.5	5.13	5	-	5
GCE2	12.5	12	10.5	7.13	7	4.5	5
GCE3	12.5	12	10.5	10.13	10	7.5	5
GCE4	12.5	12	10.5	13.13	13	10.5	5
GCE6	19.5	19	17.5	10.13	10	7.5	5
GCE8	19.5	19	17.5	13.13	13	10.5	5
GCE9	27	26.5	25	10.13	10	7.5	5
GCE12	27	26.5	25	13.13	13	10.5	5
GCE15	27	26.5	25	10.13	16	13.5	5
GCE18	28.5	28	26.5	10.13	10	7.5	10
GCE24	28.5	28	26.5	13.13	13	10.5	10

Dynamic Braking Transistor Modules



Additional Information	
Brake Module Product Page	Brake Module Drawings
Manual	Brochure

Table 43: Brake Modules

Voltage Rating	Model Number	Current Rating (Amps RMS)	Current Rating (Amps Peak)[1]
240 Vac	CDBR-20220D	20	60
	CDBR-20370D	24	80
	CDBR-20550D	40	120
	CDBR-21100D	80	250
480 Vac	CDBR-40300D	15	40
	CDBR-40450D	18	60
	CDBR-40900D	30	100
	CDBR-42200D	80	250
600 Vac	CDBR-50370D	15	40
	CDBR-51100D	30	100
	CDBR-53000D	80	250

1. Based on 10% duty, maximum 10 seconds.

Table 44: Type 1 Adapters

Voltage Rating	Model Number	Part Number
240 Vac	CDBR-20220D	EZZ022490A
	CDBR-20370D	
	CDBR-20550D	EZZ022490B
	CDBR-21100D	EZZ022490C
480 Vac	CDBR-40300D	EZZ022490A
	CDBR-40450D	
	CDBR-40900D	EZZ022490B
	CDBR-42200D	EZZ022490C
600 Vac	CDBR-5037D	EZZ022490A
	CDBR-51100D	EZZ022490C
	CDBR-53000D	

Figure 24: Open Type Chassis Dimensions

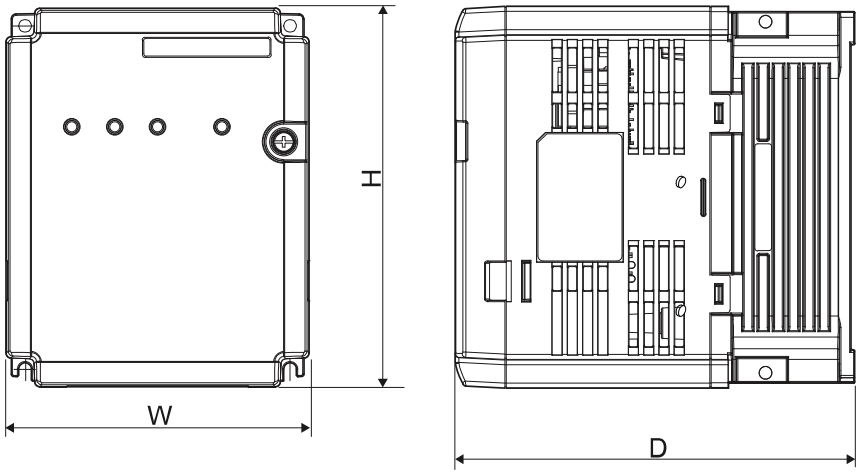

Table 45: Brake Unit (IP20) Dimensions

Model CDBR-	Figure	Dimensions (mm/in)			Weight kg/lb
		W	H	D	
2022D	*24*	120 /4.72	150/5.91	157/6.18	2/4.4
2037D					
4030D					
4045D					
5037D					

Table 46: Brake Unit (IP00) Dimensions

Model CDBR-	Figure	Dimensions (mm/in)			Weight kg/lb
		W	H	D	
2055D	24	160/6.30	235/9.25	185.9/7.32	5.5/12.13
2110D		175/6.89	294/11.57	200/7.87	7.5/16.53
4090D		160/6.30	235/9.25	185.9/7.32	5.5/12.13
4220D		175/6.89	294/11.57	200/7.87	7.5/16.53
5110D					
5300D					

Figure 25: Type 1 Dimensions

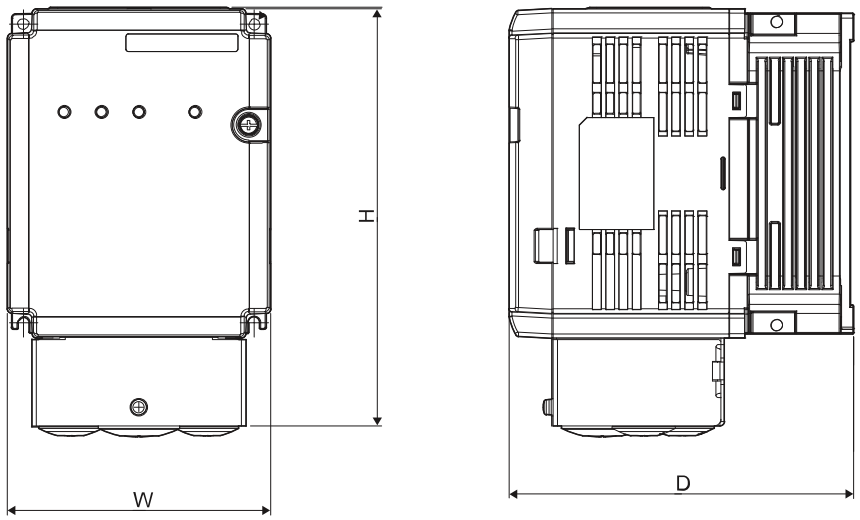

Table 47: Brake Unit (Type 1) Dimensions

Model CDBR-		Figure	Dimensions (mm/in)			Weight kg/lb
			W	H	D	
2022D	2037D	25	120/4.72	190/7.48	157/6.18	2.3/5.07
2055D			165/6.50	250/9.84	185.9/7.32	5.9/13.01
2110D			180/7.09	367/14.45	200/7.87	8.3/18.30
4030D	4045D		120/4.72	190/7.48	157/6.18	2.3/5.07
4090D			165/6.50	250/9.84	185.9/7.32	5.9/13.01
4220D			180/7.09	367/14.45	200/7.87	8.3/18.30

R1000 Regenerative Braking

R1000 Power Regenerative Unit Kits

The R1000 is a cost-effective line-regeneration solution that replaces braking transistor/resistor networks in high duty cycle braking applications.

The R1000 is ideal for applications that have large overhauling loads or make frequent stops, such as elevators, centrifuges, test stands, and winders.

Additional Information	
R1000 Product Page	Flyer
Drawings	Manual

Each R1000 regenerative unit system requires the following items:

- R1000 Module
- Power Coordination Reactor
- Current Suppression Reactor
- Fuses and Fuse Holder

Convenient, easy to order, Regenerative Kits include all the required peripheral devices pre-selected for the R1000.

Select the Regenerative Kit Number for your application using the following table.

Rated Input Voltage	Regenerative Kit Number	System Capacity	R1000 Model Number in Kit CIMR-RU	Enclosure Type
		Maximum Applicable Motor Capacity [HP][1]		
240 V	R1000-240-5HP	5	2A03P5FAA	IP20/NEMA 1
	R1000-240-7.5HP	7.5	2A0005FAA	
	R1000-240-10HP	10	2A0007FAA	
	R1000-240-15HP	15	2A0010FAA	
	R1000-240-20HP	20	2A0014FAA	
	R1000-240-25HP	25	2A0017FAA	
	R1000-240-30HP	30	2A0020FAA	
	R1000-240-40HP	40	2A0028FAA	
	R1000-240-50HP	50	2A0035AAA	IP00/Protected Chassis
	R1000-240-75HP	75	2A0053AAA	
	R1000-240-100HP	100	2A0073AAA	
	R1000-240-150HP	150	2A0105AAA	

Rated Input Voltage	Regenerative Kit Number	System Capacity	R1000 Model Number in Kit CIMR-RU	Enclosure Type
		Maximum Applicable Motor Capacity [HP][1]		
480 V	R1000-480-5HP	5	4A03P5FAA	IP20/NEMA 1
	R1000-480-7.5HP	7.5	4A0005FAA	
	R1000-480-10HP	10	4A0007FAA	
	R1000-480-15HP	15	4A0010FAA	
	R1000-480-20HP	20	4A0014FAA	
	R1000-480-25HP	25	4A0017FAA	
	R1000-480-30HP	30	4A0020FAA	
	R1000-480-40HP	40	4A0028FAA	
	R1000-480-50HP	50	4A0035AAA	IP00/Protected Chassis
	R1000-480-60HP	60	4A0043AAA	
	R1000-480-75HP	75	4A0053AAA	
	R1000-480-100HP	100	4A0073AAA	
	R1000-480-150HP	150	4A0105AAA	
	R1000-480-250HP	250	4A0150AAA	
	R1000-480-350HP	350	4A0210AAA	
	R1000-480-500HP	500	4A0300AAA	

1. Rated output capacity is based on standard duty ratings (100% for 60 sec, 25% duty cycle)

R1000 Power Regenerative Units

Each R1000 regenerative unit system requires the following items:

- R1000 Module
- Power Coordination Reactor
- Current Suppression Reactor
- Fuses and Fuse Holder

R1000 Model Selection 200 to 240 V

R1000 Power Regenerative Unit 3.5 to 105 kW, 200 to 240 V, 3-phase input, IP20/NEMA 1 or IP00/Protected Chassis. Each R1000 requires a corresponding set of input fuses/holders, power coordinating reactor, and current suppression reactor. Always install the specified devices. The R1000 does not require an external MOV to be UL compliant.

Capacity kW (HP)	R1000 Power Regenerative Unit		Current Suppression Reactor	Power Coordination Reactor	Fuses (Quantity 3)	Fuse Holder	
	Model Number CIMR-RU	Rated Current Amps[1] 100% / 80%	Part Number Yaskawa (MTE)	Part Number Yaskawa (MTE)	Part Number Yaskawa (Mersen)	Quantity Required	Part Number Yaskawa (Mersen)
3.5 (5)	2A03P5FAA[2]	10/8	05P00620-0134 (RL-01201)	05P00620-0136 (RL-01801)	FU-002031 (A60Q20-2)	1	FU-002055 (30323)
5 (7)	2A0005FAA[2]	15/12	URX000083 (RL-02501)	05P00620-0138 (RL-02502)	FU-002031 (A60Q20-2)	1	FU-002055 (30323)
7 (9)	2A0007FAA[2]	20/16	URX000083 (RL-02501)	05P00620-0044 (RL-03501)	FU-002032 (A60Q30-2)	1	FU-002055 (30323)
10 (13)	2A0010FAA[2]	30/24	05P00620-0044 (RL-03501)	05P00620-0140 (RL-04501)	UFU000153 (A30QS50-4)	3	FU-002082 (P243G)

Capacity kW (HP)	R1000 Power Regenerative Unit		Current Suppression Reactor	Power Coordination Reactor	Fuses (Quantity 3)	Fuse Holder	
	Model Number CIMR-RU	Rated Current Amps[1] 100% / 80%	Part Number Yaskawa (MTE)	Part Number Yaskawa (MTE)	Part Number Yaskawa (Mersen)	Quantity Required	Part Number Yaskawa (Mersen)
14 (19)	2A0014FAA[2]	41/33	05P00620-0141 (RL-05501)	05P00620-0141 (RL-05501)	UFU000479 (A30QS60-4)	3	FU-002082 (P243G)
17 (23)	2A0017FAA[2]	50/40	05P00620-0143 (RL-08001)	05P00620-0143 (RL-08001)	UFU000154 (A30QS80-4)	3	FU-002083 (P243)
20 (27)	2A0020FAA[2]	60/48	URX000085 (RL-10001)	05P00620-0143 (RL-08001)	UFU000155 (A30QS100-4)	3	FU-002083 (P243)
28 (38)	2A0028FAA[2]	83/66	URX000085 (RL-10001)	05P00620-0013 (RL-13002)	UFU000156 (A30QS150-4)	3	FU-002083 (P243)
35 (47)	2A0035AAA[3]	102/82	05P00620-0064 (RL-13001)	05P00620-0070 (RL-16002)	UFU000156 (A30QS150-4)	3	FU-002083 (P243)
53 (71)	2A0053AAA[3]	153/122	URX000086 (RL-16001)	05P00620-0146 (RL-20002)	UFU000494 (A30QS200-4)	3	FU-002083 (P243)
73 (98)	2A0073AAA[3]	209/167	URX000175 (RL-25001)	URX000175 (RL-25001)	UFU000375 (170M2620)	3	UFU000378 (170H1007)
105 (141)	2A0105AAA[3]	306/245	URX000178 (RL-32001)	URX000181 (RL-40002)	UFU000376 (170M3021)	3	UFU000122 (170H3003)

1. 100% for 1 min, (25% ED) / 80% continuous, ED = Duty Cycle.
2. IP20/NEMA 1enclosure.
3. IP00/Protected Chassis enclosure.

R1000 Model Selection 380 to 480 V

R1000 Power Regenerative Unit 3.5 to 300 kW, 380 to 480 V, 3-phase input, IP20/NEMA 1 or IP00/Protected Chassis.

Each R1000 requires a corresponding set of input fuses/holders, power coordinating reactor, and current suppression reactor. Always install the specified devices. The R1000 does not require an external MOV to be UL compliant.

Capacity kW (HP)	R1000 Power Regenerative Unit		Current Suppression Reactor	Power Coordination Reactor	Fuses (Quantity 3)	Fuse Holder	
	Model Number CIMR-RU	Rated Current Amps[1] 100% / 80%	Part Number Yaskawa (MTE)	Part Number Yaskawa (MTE)	Part Number Yaskawa (Mersen)	Quantity Required	Part Number Yaskawa (Mersen)
3.5 (5)	4A03P5FAA[2]	5/4	05P00620-0025 (RL-00803)	05P00620-0133 (RL-00802)	FU-002030 (A60Q15-2)	1	FU-002055 (30323)
5 (7)	4A0005FAA[2]	8/6	05P00620-0133 (RL-00802)	05P00620-0135 (RL-01202)	FU-002030 (A60Q15-2)	1	FU-002055 (30323)
7 (9)	4A0007FAA[2]	11/9	05P00620-0135 (RL-01202)	05P00620-0137 (RL-01802)	FU-002030 (A60Q15-2)	1	FU-002055 (30323)
10 (13)	4A0010FAA[2]	16/13	05P00620-0137 (RL-01802)	05P00620-0138 (RL-02502)	FU-002032 (A60Q30-2)	1	FU-002055 (30323)
14 (19)	4A0014FAA[2]	22/18	URX000083 (RL-02501)	05P00620-0139 (RL-03502)	FU-002032 (A60Q30-2)	1	FU-002055 (30323)
17 (23)	4A0017FAA[2]	27/22	05P00620-0044 (RL-03501)	05P00620-0139 (RL-03502)	FU-000783 (A50P50-4)	3	FU-002082 (P243G)
20 (27)	4A0020FAA[2]	32/26	05P00620-0049 (RL-04502)	05P00620-0049 (RL-04502)	FU-000783 (A50P50-4)	3	FU-002082 (P243G)
28 (38)	4A0028FAA[2]	43/34	05P00620-0142 (RL-05502)	05P00620-0142 (RL-05502)	UFU000480 (A50P60-4)	3	FU-002082 (P243G)
35 (47)	4A0035AAA[3]	54/43	05P00620-0144 (RL-08002)	05P00620-0144 (RL-08002)	FU-000806 (A50P80-4)	3	FU-002084 (P243E)

Capacity kW (HP)	R1000 Power Regenerative Unit		Current Suppression Reactor	Power Coordination Reactor	Fuses (Quantity 3)	Fuse Holder	
	Model Number CIMR-RU	Rated Current Amps[1] 100% / 80%	Part Number Yaskawa (MTE)	Part Number Yaskawa (MTE)	Part Number Yaskawa (Mersen)	Quantity Required	Part Number Yaskawa (Mersen)
43 (58)	4A0043AAA[3]	66/53	05P00620-0143 (RL-08001)	05P00620-0144 (RL-08002)	FU-000807 (A50P100-4)	3	FU-002084 (P243E)
53 (71)	4A0053AAA[3]	81/65	URX000085 (RL-10001)	05P00620-0145 (RL-10002)	FU-000809 (A50P150-4)	3	FU-002084 (P243E)
73 (98)	4A0073AAA[3]	110/88	05P00620-0064 (RL-13001)	05P00620-0070 (RL-16002)	FU-000809 (A50P150-4)	3	FU-002084 (P243E)
105 (141)	4A0105AAA[3]	161/129	05P00620-0075 (RL-20001)	05P00620-0146 (RL-20002)	UFU000374 (170M1371)	3	UFU000378 (170H1007)
150 (201)	4A0150AAA[3]	237/190	URX000175 (RL-25001)	URX000176 (RL-25002)	UFU000375 (170M2620)	3	UFU000378 (170H1007)
210 (282)	4A0210AAA[3]	326/261	URX000181 (RL-40001)	URX000182 (RL-40002)	UFU000376 (170M3021)	3	UFU000122 (170H3003)
300 (402)	4A0300AAA[3]	466/373	URX000088 (RL-50001)	05P00620-0094 (RL-50002)	UFU000377 (170M4016)	3	UFU000122 (170H3003)

1. 100% for 1 min, (25% ED) / 80% continuous, ED = Duty Cycle.
2. IP20/NEMA 1enclosure.
3. IP00/Protected Chassis enclosure.

R1000 Power Regenerative Unit Options

External Heatsink Kits

An External Heatsink Kit lets you mount a drive with the drive's heatsink external (NEMA 1backside) to the enclosure. Option kit for customer mounting. Larger standard drives include brackets.

Table 48: External Heatsink Kits NEMA 1 for 200 to 240 V Models

Drive Model CIMR-RU	Kit
2A03P5FAA	EZZ020800B
2A0005FAA	
2A0007FAA	
2A0010FAA	EZZ020800C
2A0014FAA	
2A0017FAA	EZZ020800D
2A0020FAA	
2A0028FAA	
0035 ~ 105	Required brackets are included with the unit.

Table 49: External Heatsink Kits NEMA 1 for 380 to 480 V Models

Drive Model CIMR-RU	Kit
4A03P5FAA	EZZ020800B
4A0005FAA	
4A0007FAA	
4A0010FAA	EZZ020800C
4A0014FAA	
4A0017FAA	EZZ020800D
4A0020FAA	
4A0028FAA	
0035 ~ 0300	Required brackets are included with the drive.

GA800 Configured Packages

1-600 HP Type 1, Type 12, & Type 3R GA800 Configured Packages

The GA800 Configured package provides a GA800 drive in a Type 1, Type 12, or Type 3R industrial enclosure, with space for several commonly used options, such as reactors, RFI filters, circuit breakers, etc. The GA800 configured package has been designed for flexibility in providing commonly requested features and options.

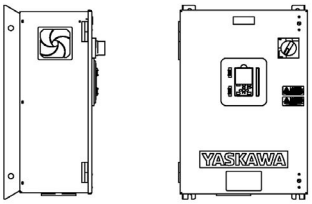

Wall Mount

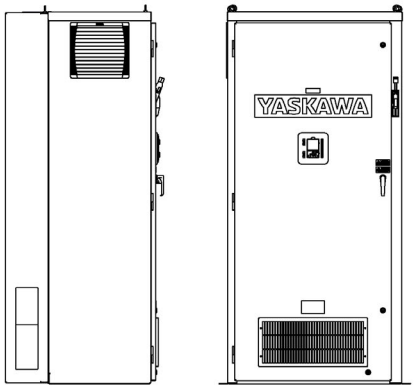

Single-Door Floor Mount

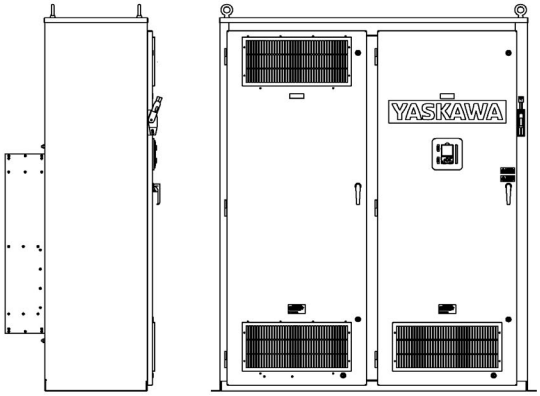

Two-Door Floor Mount

Ratings, Standards, Conditions, & Options

Ratings
1 to 150 HP @ 240 Vac
1 to 1000 HP @ 480 Vac

Standards and Reliability
UL 508A (Industrial Control Panels)
UL, cUL Listed

Service Conditions
Ambient Temperature: -10 °C to +40 °C (14 °F to 104 °F)
Ambient Storage Temperature: -20 °C to +60 °C (-40 °F to +140 °F)
Humidity: 0 % to 95 %, non-condensing
Altitude: 0 to 1000 meters (3300 feet); higher by derating

Configured Options
Feedback Cards
Input and Output Cards
Network Communications
Input Breaker
Input Disconnect
Input Fuses
120 Vac Interfaces
Line/Load Reactors
Input Filter
Bus Reactor (For small HP ratings; see following tables)
Dynamic Braking
Door-mounted Hand/Off/Auto Switch
Door-mounted Speed Pot
Surge Suppressor
Space Heater
Blower Motor Starter

Model Number Configuring

1 - 600 HP Type 1, Type 12, & Type 3R GA800 Configured

Step 1: Find the Base Number for the required enclosure type, voltage, and current rating.

Step 2: Add the option code letter for each required option. Any Power option must be preceded by (P); any Control & Communication option by (T) and any Special option by (S).

Step 3: Check that complete model number does not exceed 18 characters.

Example: A Type 1 Configured HD package (G8C4) with a 480 V, 40 A GA800 drive (B040), with standard AIC circuit breaker, input fuses, a 3% bus reactor (P followed by EX), and PROFIBUS communications capability (T followed by H) would be G8C4B040PEXTH.

Figure 26: Model Number Key

Base Number	Options		
	Power	Control	Special

G8C 4 B 040 P ____ T ____ S ____

GA800 Configured

Enclosure and Duty Rating

1	Type 1 ND
2	Type 12 ND
3	Type 3R ND
4	Type 1 HD
5	Type 12 HD
6	Type 3R HD

Voltage

A	240 V
B	480 V

Current

Rated Amps
(Ex.: “040”=40 A)

Power Options (P)

E	Circuit Breaker (Std) (1)	Select None or One
C	Circuit Breaker (65 kA) (1)	
M	Circuit Breaker (100 kA) (1)	
D	Non-Fused Disconnect	
J	DB w/OH Shutdown (1)(2)(4)	
L	DB Transistor (2)(4)	Select None or One
F	Input Fuses (1)	Select None or One
R	3% Line Reactor	Select None or One
X	3% Bus Reactor (5)	
H	3% Load Reactor	
N	Cap Filter	Select None or One
2	Surge Suppressor (3)	Select None, Any or All
3	Space Heater (3)	
4	50 Degree C Ambient (3)	

Control & Communications (T)

		Group (6)
C	PROFINET dual port (SI-EP3)	Group 1: Select None or One
D	EtherNet/IP dual port (SI-EN3D)	
G	DeviceNet (SI-N3)	
H	PROFIBUS-DP (SI-P3)	
Q	Modbus TCP/IP dual port (SI-EM3D)	
A	Analog Input	
F	Digital Input	
N	Analog Monitor	Group 2
E	Digital Output	
X	PG-X3 Feedback Card	Group 3: Select None or One
B	Blower Motor Starter (4)	Group 4
V	120 V Digital Interface	
Y	Hand/Off/Auto Switch	
Z	Speed Pot	
M	Keypad Viewing Window (3)	

Special

B	Bluetooth Keypad

1) Many power option combinations are dependent on voltage, HP, and enclosure type. Refer to the selection tables in this document for available power options for each specific model.
2) Options J and L not allowed together.
3) Type 3R enclosures only.
4) Not available for Type 3R enclosure.
5) 3% Bus reactors are only available as an option on small ratings - see table; large drives have a bus reactor as standard.
6) The sum of options from Groups 1, 2, and 3 combined must not exceed 3 options.
If no option from Group 1 is selected, then ALL options from Group 2 and Group 3 may be selected.
Select anything from Group 4, regardless of other group selections.

Table 50: GA800 Configured Panel SCCR (Short Circuit Current Rating) for Power Option Combinations

Option Type	SCCR (Short Circuit Current Rating) of Panel	
	With Input Fuse [1]	Without Input Fuse [1]
C - 65 kAIC Circuit Breaker	65 kA	65 kA when allowed as a selection
M - 100 kAIC Circuit Breaker	100 kA	100 kA when allowed as a selection
D - Disconnect	100 kA	Requires external short circuit protection according to GA800 Technical Reference. SCCR is limited to 100 kA, or rating of upstream device, whichever is less.
E - Standard Circuit Breaker	All 240 V: 25 kA Normal Duty 480 V B002 through B156: 18 kA Normal Duty 480 V B180 through BK20: 35 kA Heavy Duty 480 V B002 through B180: 18 kA Heavy Duty 480 V B240 through BK09: 35 kA	Same SCCR as with input fuses, but only when allowed as a selection. Refer to selection tables.
J - Dynamic Braking Overtemp Shutdown		
None of the options above	Varies by rating. Consult Factory	

1. Some package models with circuit breakers or disconnects automatically include input fuses. Refer to Model Number Key.

Additional Configured Package Options

Table 51: Type 1, Type 12, Type 3R 240 V, 480 V Configured Package

Additional Installed Power Options (valid for all voltage and power ratings)	
P Code	Description
N	Noise Filter
2	Surge Suppressor (only for Type 3R)
3	Cabinet Space Heater (thermostatically controlled, only for Type 3R)

Table 52: Communication and Control Options

Installed Control Options (applies to all voltage and power ratings)		
Group[1] [2]	T Code	Description
Group 1: Select None or One	C	PROFINET dual port (SI-EP3)
	D	EtherNet/IP dual port (SI-EN3D)
	G	DeviceNet (SI-N3)
	H	PROFIBUS-DP (SI-P3)
	Q	Modbus/TCP dual port (SI-EM3D)
	A	Analog Input (provides 3 additional inputs) (AI-A3)
	F	Digital Input (provides 16 additional inputs) (DI-A3)
Group 2	N	Analog Monitor (provides 2 additional outputs) (AO-A3)
	E	Digital Output (provides 8 additional outputs) (DO-A3)
Group 3: Select None or One	X	Incremental Encoder Interface (line driver type) (PG-X3)
Group 4: Select None, Any, or All	B	Blower Motor Starter (only for Type 1 and Type 12)
	V	120 V Digital Interface (converts standard inputs)
	Y	HOA Switch
	Z	Speed Pot
	M	Lockable Viewing Window (covers door mounted operator devices, only for Type 3R)

1. The sum of options from Groups 1, 2, and 3 combined must not exceed 3 options.
   If no option from Group 1 is selected, then ALL options from Group 2 and Group 3 may be selected.
   Select anything from Group 4, regardless of other group selections.
2. Option PF is not allowed with control option TB for the following base models because input fusing is automatically included:
   G8C1A004 - G81CA009, G8C1B002 - G8C1B007, G8C2A004 - G8C2A009, G8C2B002 - G8C2B007.

Table 53: Special Options

Installed Special Options (applies to all voltage and power ratings)	
S Code	Description
B	Bluetooth Keypad Upgrade (comes with standard keypad if not selected)

Freestanding Leg Kit, Type 3R

This option allows all the Type 3R wall-mount enclosures to be mounted on legs so that the control can be freestanding and off the ground. Any kit can be used on the wall-mount enclosures. Floor-mount enclosures come standard with freestanding legs.

Table 54: Freestanding Leg Kits

Part Number	Description
UUX000923	12 inch height (for all Type 3R wall mount sizes)
UUX001656	18 inch height (for all Type 3R wall mount sizes)
UUX000924	30 inch height (for all Type 3R wall mount sizes)

Package Descriptions

Table 55: Configured Option Descriptions

Enclosure/Duty Options	
Type 1 ND	(1) The Normal Duty drive and Configured controls are provided in a Type 1 enclosure, large enough to accommodate any or all of the Configured package options.
Type 1 HD	(4) The Heavy Duty drive and Configured controls are provided in a Type 1 enclosure, large enough to accommodate any or all of the Configured package options.
Type 12 ND	(2) The Normal Duty drive and Configured controls are provided in a Type 12 enclosure, large enough to accommodate any or all of the Configured package options.
Type 12 HD	(5) The Heavy Duty drive and Configured controls are provided in a Type 12 enclosure, large enough to accommodate any or all of the Configured package options.
Type 3R ND	(3) The Normal Duty drive and Configured controls are provided in a Type 3R enclosure, large enough to accommodate any or all of the Configured package options.
Type 3R HD	(6) The Heavy Duty drive and Configured controls are provided in a Type 3R enclosure, large enough to accommodate any or all of the Configured package options.

Note: The term “Type” (when related to enclosure solutions) refers not only to NEMA Type, but also represents UL Listing for the specific Type(s).

Power Options	
Standard Circuit Breaker	(E) This option provides a circuit breaker with operating handle. See Table 50 for package SCCR.
65 kAIC Circuit Breaker	(C) This option provides a circuit breaker with operating handle and an Interrupting Capacity of 65 kA. See Table 50 for package SCCR.
100 kAIC Circuit Breaker	(M) This option provides a circuit breaker with operating handle and an Interrupting Capacity of 100 kA. See Table 50 for package SCCR.
Disconnect	(D) This option provides a non-fused disconnect with operating handle. See Table 50 for package SCCR.
Input Fuses	(F) This option provides input fuses for drive short circuit protection. See Table 50 for package SCCR.
Input Reactor	(R) No form of input impedance is normally required for the GA800 Configured. A 3% line reactor is available if additional impedance is desired, usually to reduce the effects of line-side transients and input current THD.
DC Bus Reactor	(X) Large HP drives include 3% bus impedance. A 3% bus reactor is available for small HP drives (see table) if additional impedance is desired, usually to reduce the effects of line-side transients and input current THD.
Output Reactor	(H) No form of output impedance is normally required for the GA800 Configured. A 3% load reactor is available if additional output impedance is desired, usually for long lead-lengths or noise reduction.
Cap Filter	(N) The standard configuration does not include a filter. The cap filter is a delta-wye capacitive network, used to help attenuate electrical noise.
Dynamic Brake Transistor	(L) Available only for Types 1 and 12 enclosures. For drives with internal transistor, this option provides a panel mounted terminal block for DB resistor connection point. For larger drives, this option provides panel mounted CDBR transistor modules. DB Resistors and overheat protection not included.
Dynamic Braking with Overtemp Shutdown	(J) This option provides 10-15% duty cycle braking capability (DB resistors not included) to improve deceleration performance. A shunt trip circuit breaker (equivalent to option E) and circuitry is also provided to disconnect the input power from the drive if the DB over-temperature switches activate. See Table 50 for package SCCR. Not available for Type 3R enclosures.
Surge Suppressor	(2) This option will offer some degree of protection from transient surges coming through the power line cables. Lightning strikes are the most common source of surges. This option is only available for the Type 3R enclosure.
Space Heater	(3) This option maintains the internal cabinet temperature to reduce condensation. This option is only available for the Type 3R enclosure.
50 Degrees C Ambient	(4) This option will allow the enclosure to be operated in an ambient temperature of 50 °C (122 °F). The standard basic design is rated for 40 °C ambient. This option is only available for the Type 3R enclosure.

Control Options	
EtherNet/IP (Dual Port) SI-EN3D	(D) This option allows the drive to communicate on an Ethernet/IP network.
DeviceNet SI-N3	(G) This option allows the drive to communicate on a DeviceNet network.
PROFIBUS SI-P3	(H) This option allows the drive to communicate on a PROFIBUS network.
PROFINET SI-EP3	(C) This option allows the drive to communicate on a PROFINET network.
Modbus TCP/IP (Dual Port) SI-EM3D	(Q) This option allows the drive to communicate on a Modbus TCP/IP network.
Analog Input AI-A3:	(A) This option provides 3 additional high-resolution analog inputs (13 Bit + Sign) to the drive.
Digital Input DI-A3	(F) This option provides 16 additional digital inputs (binary or BCD; 8, 12, or 16 bit) to the drive.
Analog Output AO-A3	(N) This option provides 2 additional isolated signal outputs (11 Bit + Sign) for remote monitoring of any two of the drive's "U1" parameters.
Digital Output DO-A3	(E) This option provides 8 additional digital outputs for use in monitoring the status of the drive.
Encoder Feedback PG-X3	(X) This option provides speed feedback using a line driver pulse generator (PG).
Blower Motor Starter	(B) This option (available only for Type 1 and Type 12 enclosures) provides starter and fuses for control of a three-phase AC blower motor for the driven AC motor. Blower motor is the same voltage as the drive input voltage, and has the following max FLA values: 3.0 FLA for 240V, 1.5 FLA for 480V 3/4 through 400 HP, 3.0 FLA for 480V 450 through 500 HP.
120 VAC Input DI-101	(V) This option converts external 120 VAC control signals to the drive's 24 VDC digital input terminals (S1 through S8).
Hand/Off/Auto Switch	(Y) This option provides a door-mounted Hand/Off/Auto Selector Switch for determining start/stop and speed control.
Speed Pot	(Z) This option provides a door-mounted Speed Pot with knob to control motor speed.
Keypad Viewing Window	(M) All GA800 standard drive packages include a door mounted keypad enclosed in a plastic bezel with a clear door that opens for access. Option M (for Type 3R only) provides a larger painted steel solution, including a keylock that protects the keypad and other door mounted controls.
Special Options	
Bluetooth Keypad	(B) This option equips the configured package with a Bluetooth enabled keypad.

This page is intentionally left blank.

Type 1 Configured Drives and Options

Table 56: Type 1, 240 V, Normal Duty, GA800 Configured Package

Rated Output Current (Amps)	Nominal HP	Type 1 Configured Enclosure G8C1	Circuit Breaker / Disconnect				Input Fuses	Line Impedance			Dynamic Brake Transistor	
			E = Std	C = 65k AIC	M = 100k AIC	D = Disconnect	F = Input Fuses	R = 3% AC Line Reactor	X = 3% DC Bus Reactor	H = 3% AC Load Reactor	L = 10% Duty J = 10% Duty w/ Overtemp Shutdown	
4.2	1	A004	Available	Available	Available	Available	Available	Available	Available	Available	Available	Available
6.8	2	A006										
9.6	3	A009										
15.2	5	A015										
22	7.5	A022										
28	10	A028										
42	15	A042										
54	20	A054										
68	25	A068										
80	30	A080										
104	40	A104							Not Available			
130	50	A130										
154	60	A154										
192	75	A192										
248	100	A248										
312	125	A312										
360	150	A360										

Table 57: Type 1, 240 V, Heavy Duty, GA800 Configured Package

Rated Output Current (Amps)	Nominal HP	Type 1 Configured Enclosure G8C4	Circuit Breaker / Disconnect				Input Fuses	Line Impedance			Dynamic Brake Transistor	
			E = Std	C = 65k AIC	M = 100k AIC	D = Disconnect	F = Input Fuses	R = 3% AC Line Reactor	X = 3% DC Bus Reactor	H = 3% AC Load Reactor	L = 10% Duty J = 10% Duty w/ Overtemp Shutdown	
4.2	1	A004	Available	Available	Available	Available	Available	Available	Available	Available	Available	Available
6.8	2	A006										
9.6	3	A009										
15.2	5	A015										
22	7.5	A022										
28	10	A028										
42	15	A042										
54	20	A054										
68	25	A068										
80	30	A080							Not Available			
104	40	A104										
130	50	A130										
154	60	A154										
192	75	A192										
248	100	A248										
312	125	A312										
360	150	A360										

Table 58: Type 1, 480 V, Normal Duty, GA800 Configured Package

Rated Output Current (Amps)	Nominal HP	Type 1 Configured Enclosure G8C1	Circuit Breaker[1,2,3]/ Disconnect				Input Fuses[1,2,3]	Line Impedance			Dynamic Brake Transistor	
			E = Std	C = 65k AIC	M = 100k AIC	D = Disconnect	F = Input Fuses	R = 3% AC Line Reactor	X = 3% DC Bus Reactor	H = 3% AC Load Reactor	L = 10% Duty	J[1] = 10% Duty w/ Overtemp Shutdown
2.1	1	B002	Available	Available	Available	Available	Available	Available	Available	Available	Available	Available
3.4	2	B003										
4.8	3	B004										
7.6	5	B007										
11	7.5	B011										
14	10	B014										
21	15	B021										
27	20	B027										
34	25	B034										
40	30	B040										
52	40	B052							Not Available			
65	50	B065										
77	60	B077										
96	75	B096										
124	100	B124										
156	125	B156										
180	150	B180										
240	200	B240										
302	250	B302										
361	300	B361										
414	350	B414										
477	400	B477									Not Available	
515	450	B515										
590	500	B590										
720	600	B720										
810	700	B810	Not Available				Included	Not Available				
930	800	B930										
1090	900	BK09										
1200	1000	BK20										

1. 480V models G8C1B007 - G8C1B720 with options E, C, J, or M automatically include input fusing. Option F not allowed for these combinations.
2. Power option E, F, C, J, or M is required for normal duty models B361 to B720.
3. 480V models G8C1B810 and larger automatically include input fusing. Option F not allowed for these models.

Table 59: Type 1, 480 V, Heavy Duty, GA800 Configured Package

Rated Output Current (Amps)	Nominal HP	Type 1 Configured Enclosure G8C4	Circuit Breaker[1,2,3]/ Disconnect				Input Fuses[1,2,3]	Line Impedance			Dynamic Brake Transistor	
			E = Std	C = 65k AIC	M = 100k AIC	D = Disconnect	F = Input Fuses	R = 3% AC Line Reactor	X = 3% DC Bus Reactor	H = 3% AC Load Reactor	L = 10% Duty	J[1] = 10% Duty w/ Overtemp Shutdown
2.1	1	B002	Available	Available	Available	Available	Available	Available	Available	Available	Available	Available
3.4	2	B003										
4.8	3	B004										
7.6	5	B007										
11	7.5	B011										
14	10	B014										
21	15	B021										
27	20	B027										
34	25	B034										
40	30	B040							Not Available			
52	40	B052										
65	50	B065										
77	60	B077										
96	75	B096										
124	100	B124										
156	125	B156										
180	150	B180										
240	200	B240										
302	250	B302										
361	300	B361										
414	350	B414								Not Available		
477	400	B477										
515	450	B515										
590	500	B590										
720	600	B720	Not Available				Included	Not Available				
810	700	B810										
930	800	B930										
1090	900	BK09										

1. 480V models G8C4B004 - G8C4B590 with options E, C, J, or M automatically include input fusing. Option F not allowed for these combinations.
2. Power option E, F, C, J, or M is required for heavy duty models B302 to B590.
3. 480V models G8C4B720 and larger automatically include input fusing. Option F not allowed for these models.

Type 12 Configured Drives and Options

Table 60: Type 12, 240 V, Normal Duty, GA800 Configured Package

Rated Output Current (Amps)	Nominal HP	Type 12 Configured Enclosure G8C2	Circuit Breaker / Disconnect				Input Fuses	Line Impedance			Dynamic Brake Transistor	
			E = Std	C = 65k AIC	M = 100k AIC	D = Disconnect	F = Input Fuses	R = 3% AC Line Reactor	X = 3% DC Bus Reactor	H = 3% AC Load Reactor	L = 10% Duty	J = 10% Duty w/ Overtemp Shutdown
4.2	1	A004	Available	Available	Available	Available	Available	Available	Available	Available	Available	Available
6.8	2	A006										
9.6	3	A009										
15.2	5	A015										
22	7.5	A022										
28	10	A028										
42	15	A042										
54	20	A054										
68	25	A068										
80	30	A080										
104	40	A104							Not Available			
130	50	A130										
154	60	A154										
192	75	A192										
248	100	A248										
312	125	A312										
360	150	A360										

Table 61: Type 12, 240 V, Heavy Duty, GA800 Configured Package

Rated Output Current (Amps)	Nominal HP	Type 12 Configured Enclosure G8C5	Circuit Breaker / Disconnect				Input Fuses	Line Impedance			Dynamic Brake Transistor	
			E = Std	C = 65k AIC	M = 100k AIC	D = Disconnect	F = Input Fuses	R = 3% AC Line Reactor	X = 3% DC Bus Reactor	H = 3% AC Load Reactor	L = 10% Duty	J = 10% Duty w/ Overtemp Shutdown
4.2	1	A004	Available	Available	Available	Available	Available	Available	Available	Available	Available	Available
6.8	2	A006										
9.6	3	A009										
15.2	5	A015										
22	7.5	A022										
28	10	A028										
42	15	A042										
54	20	A054										
68	25	A068										
80	30	A080							Not Available			
104	40	A104										
130	50	A130										
154	60	A154										
192	75	A192										
248	100	A248										
312	125	A312										
360	150	A360										

Table 62: Type 12, 480 V, Normal Duty, GA800 Configured Package

Rated Output Current (Amps)	Nominal HP	Type 12 Configured Enclosure G8C2	Circuit Breaker[1,2,3] / Disconnect				Input Fuses[1,2,3]	Line Impedance			Dynamic Brake Transistor	
			E = Std	C = 65k AIC	M = 100k AIC	D = Disconnect	F = Input Fuses	R = 3% AC Line Reactor	X = 3% DC Bus Reactor	H = 3% AC Load Reactor	L = 10% Duty	J[1] = 10% Duty w/ Overtemp Shutdown
2.1	1	B002	Available	Available	Available	Available	Available	Available	Available	Available	Available	Available
3.4	2	B003										
4.8	3	B004										
7.6	5	B007										
11	7.5	B011										
14	10	B014										
21	15	B021										
27	20	B027										
34	25	B034										
40	30	B040										
52	40	B052							Not Available			
65	50	B065										
77	60	B077										
96	75	B096										
124	100	B124										
156	125	B156										
180	150	B180										
240	200	B240										
302	250	B302										
361	300	B361										
414	350	B414										
477	400	B477									Not Available	
515	450	B515										
590	500	B590										
720	600	B720										
810	700	B810	Not Available				Included	Not Available				
930	800	B930										
1090	900	BK09										
1200	1000	BK20										

1. 480V models G8C2B065 - G8C2B720 with options E, C, J, or M automatically include input fusing. Option F not allowed for these combinations.
2. Power option E, F, C, J, or M is required for normal duty models B361 to B720.
3. 480V models G8C2B810 and larger automatically include input fusing. Option F not allowed for these models.

Table 63: Type 12, 480 V, Heavy Duty, GA800 Configured Package

<table>
<tr><th rowspan="2">Rated Output Current (Amps)</th><th rowspan="2">Nominal HP</th><th rowspan="2">Type 12 Configured Enclosure G8C5</th><th colspan="4">Circuit Breaker[1,2,3] / Disconnect</th><th>Input Fuses[1,2,3]</th><th colspan="3">Line Impedance</th><th colspan="2">Dynamic Brake Transistor</th></tr>
<tr><th>E = Std</th><th>C = 65k AIC</th><th>M = 100k AIC</th><th>D = Disconnect</th><th>F = Input Fuses</th><th>R = 3% AC Line Reactor</th><th>X = 3% DC Bus Reactor</th><th>H = 3% AC Load Reactor</th><th>L = 10% Duty</th><th>J[1] = 10% Duty w/ Overtemp Shutdown</th></tr>
<tr><td>2.1</td><td>1</td><td>B002</td><td rowspan="15">Available</td><td rowspan="15">Available</td><td rowspan="15">Available</td><td rowspan="28">Available</td><td rowspan="15">Available</td><td rowspan="15">Available</td><td rowspan="8">Available</td><td rowspan="15">Available</td><td rowspan="15">Available</td><td rowspan="15">Available</td></tr>
<tr><td>3.4</td><td>2</td><td>B003</td></tr>
<tr><td>4.8</td><td>3</td><td>B004</td></tr>
<tr><td>7.6</td><td>5</td><td>B007</td></tr>
<tr><td>11</td><td>7.5</td><td>B011</td></tr>
<tr><td>14</td><td>10</td><td>B014</td></tr>
<tr><td>21</td><td>15</td><td>B021</td></tr>
<tr><td>27</td><td>20</td><td>B027</td></tr>
<tr><td>34</td><td>25</td><td>B034</td><td rowspan="7">Not Available</td></tr>
<tr><td>40</td><td>30</td><td>B040</td></tr>
<tr><td>52</td><td>40</td><td>B052</td></tr>
<tr><td>65</td><td>50</td><td>B065</td></tr>
<tr><td>77</td><td>60</td><td>B077</td></tr>
<tr><td>96</td><td>75</td><td>B096</td></tr>
<tr><td>124</td><td>100</td><td>B124</td></tr>
<tr><td>156</td><td>125</td><td>B156</td><td rowspan="13">Not Available</td></tr>
<tr><td>180</td><td>150</td><td>B180</td></tr>
<tr><td>240</td><td>200</td><td>B240</td></tr>
<tr><td>302</td><td>250</td><td>B302</td></tr>
<tr><td>361</td><td>300</td><td>B361</td></tr>
<tr><td>414</td><td>350</td><td>B414</td></tr>
<tr><td>477</td><td>400</td><td>B477</td></tr>
<tr><td>515</td><td>450</td><td>B515</td></tr>
<tr><td>590</td><td>500</td><td>B590</td></tr>
<tr><td>720</td><td>600</td><td>B720</td><td colspan="3" rowspan="4">Not Available</td><td rowspan="4">Included</td><td colspan="5" rowspan="4">Not Available</td></tr>
<tr><td>810</td><td>700</td><td>B810</td></tr>
<tr><td>930</td><td>800</td><td>B930</td></tr>
<tr><td>1090</td><td>900</td><td>BK09</td></tr>
</table>

1. 480V models G8C5B052 - G8C5B590 with options E, C, J, or M automatically include input fusing. Option F not allowed for these combinations.
2. Power option E, F, C, J, or M is required for heavy duty models B302 to B590.
3. 480V models G8C5B720 and larger automatically include input fusing. Option F not allowed for these models.

Type 3R Configured Drives and Options

Table 64: Type 3R, 240 V, Normal Duty, GA800 Configured Package

Rated Output Current (Amps)	Nominal HP	Type 3R Configured Enclosure G8C3	Circuit Breaker / Disconnect				Input Fuses	Line Impedance			50 °C Ambient Temperature
			E = Std	C = 65k AIC	M = 100k AIC	D = Disconnect	F = Input Fuses	R = 3% AC Line Reactor	X = 3% DC Bus Reactor	H = 3% AC Load Reactor	4 = 50 °C Ambient Temperature Rating
4.2	1	A004	Available	Available	Available	Available	Available	Available	Available	Available	Available
6.8	2	A006									
9.6	3	A009									
15.2	5	A015									
22	7.5	A022									
28	10	A028									
42	15	A042									
54	20	A054									
68	25	A068									
80	30	A080									
104	40	A104							Not Available		
130	50	A130									
154	60	A154									
192	75	A192									
248	100	A248									
312	125	A312									
360	150	A360									

Table 65: Type 3R, 240 V, Heavy Duty, GA800 Configured Package

Rated Output Current (Amps)	Nominal HP	Type 3R Configured Enclosure G8C6	Circuit Breaker / Disconnect				Input Fuses	Line Impedance			50 °C Ambient Temperature
			E = Std	C = 65k AIC	M = 100k AIC	D = Disconnect	F = Input Fuses	R = 3% AC Line Reactor	X = 3% DC Bus Reactor	H = 3% AC Load Reactor	4 = 50 °C Ambient Temperature Rating
4.2	1	A004	Available	Available	Available	Available	Available	Available	Available	Available	Available
6.8	2	A006									
9.6	3	A009									
15.2	5	A015									
22	7.5	A022									
28	10	A028									
42	15	A042									
54	20	A054									
68	25	A068									
80	30	A080							Not Available		
104	40	A104									
130	50	A130									
154	60	A154									
192	75	A192									
248	100	A248									
312	125	A312									
360	150	A360									

Table 66: Type 3R, 480 V, Normal Duty, GA800 Configured Package

Rated Output Current (Amps)	Nominal HP	Type 3R Configured Enclosure G8C3	Circuit Breaker[1,2,3] / Disconnect				Input Fuses[1,2,3]	Line Impedance			50 °C Ambient Temperature
			E = Std	C = 65k AIC	M = 100k AIC	D = Disconnect	F = Input Fuses	R = 3% AC Line Reactor	X = 3% DC Bus Reactor	H = 3% AC Load Reactor	4 = 50 °C Ambient Temperature Rating
2.1	1	B002	Available	Available	Available	Available	Available	Available	Available	Available	Available
3.4	2	B003									
4.8	3	B004									
7.6	5	B007									
11	7.5	B011									
14	10	B014									
21	15	B021									
27	20	B027									
34	25	B034									
40	30	B040									
52	40	B052							Not Available		
65	50	B065									
77	60	B077									
96	75	B096									
124	100	B124									
156	125	B156									
180	150	B180									
240	200	B240									
302	250	B302									
361	300	B361									
414	350	B414									
477	400	B477									
515	450	B515									
590	500	B590									
720	600	B720									
810	700	B810					Included				
930	800	B930									
1090	900	BK09									
1200	1000	BK20									

1. 480V models G8C3B180 and larger with options E, C, J, or M automatically include input fusing. Option F not allowed for these combinations.
2. Power option E, F, C, or M is required for normal duty models B361 to B720.
3. 480V models G8C3B810 and larger automatically include input fusing. Option F not allowed for these models.

Table 67: Type 3R, 480 V, Heavy Duty, GA800 Configured Package

Rated Output Current (Amps)	Nominal HP	Type 3R Configured Enclosure G8C6	Circuit Breaker[1,2,3] / Disconnect				Input Fuses[1,2,3]	Line Impedance			50 °C Ambient Temperature
			E = Std	C = 65k AIC	M = 100k AIC	D = Disconnect	F = Input Fuses	R = 3% AC Line Reactor	X = 3% DC Bus Reactor	H = 3% AC Load Reactor	4 = 50 °C Ambient Temperature Rating
2.1	1	B002	Available	Available	Available	Available	Available	Available	Available	Available	Available
3.4	2	B003									
4.8	3	B004									
7.6	5	B007									
11	7.5	B011									
14	10	B014									
21	15	B021									
27	20	B027									
34	25	B034									
40	30	B040							Not Available		
52	40	B052									
65	50	B065									
77	60	B077									
96	75	B096									
124	100	B124									
156	125	B156									
180	150	B180									
240	200	B240									
302	250	B302									
361	300	B361									
414	350	B414									
477	400	B477									
515	450	B515									
590	500	B590									
720	600	B720					Included				
810	700	B810									
930	800	B930									
1090	900	BK09									

1. 480V models G8C6B156and larger with options E, C, J, or M automatically include input fusing. Option F not allowed for these combinations.
2. Power option E, F, C, or M is required for heavy duty models B302 to B590.
3. 480V models G8C6B720 and larger automatically include input fusing. Option F not allowed for these models.

Type 1 Configured Package Dimensions

Table 68: 240 V, Type 1, Normal Duty

Type 1 Configured (ND) G8C1 . .	Amps	Nominal HP	Physical Dimensions (in.)			Weight (lb) [1]	Drawing Number [2]
			H	W	D		
A004	4.2	1	28.8	18.3	14.3	81	DD.G.1.W1.01
A006	6.8	2				83	
A009	9.6	3				86	
A015	15.2	5				89	
A022	22	7.5	34.8	20.8	14.4	110	DD.G.1.W2.01
A028	28	10				113	
A042	42	15	39.8	25.8	15.9	146	DD.G.1.W3.01
A054	54	20				154	
A068	68	25				160	
A080	80	30				165	
A104	104	40	50.8	32.9	18.3	260	DD.G.1.W4.01
A130	130	50				274	
A154	154	60				325	
A192	192	75	85.7	41.3	34.1	705	DD.G.1.F1.01
A248	248	100				785	
A312	312	125				840	
A360	360	150				926	

1. This data represents the average drive package weight only, not shipping weight.
2. The drawings are available in pdf, .doc., and .dwg formats. Click the Mechanical Drawings link available on the GA800 Product Details page at www.yaskawa.com.

Table 69: 240 V, Type 1, Heavy Duty

Type 1 Configured (HD) G8C4 . .	Amps	Nominal HP	Physical Dimensions (in.)			Weight (lb) [1]	Drawing Number [2]
			H	W	D		
A004	4.2	1	28.8	18.3	14.3	81	DD.G.1.W1.01
A006	6.8	2				83	
A009	9.6	3				86	
A015	15.2	5				89	
A022	22	7.5					
A028	28	10	34.8	20.8	14.4	110	DD.G.1.W2.01
A042	42	15				122	
A054	54	20	39.8	25.8	15.9	156	DD.G.1.W3.01
A068	68	25				161	
A080	80	30	50.8	32.9	18.3	254	DD.G.1.W4.01
A104	104	40				263	
A130	130	50				323	
A154	154	60				330	
A192	192	75	85.7	41.3	34.1	757	DD.G.1.F1.01
A248	248	100				788	
A312	312	125				896	
A360	360	150				969	

1. This data represents the average drive package weight only, not shipping weight.
2. The drawings are available in .pdf, .doc., and .dwg formats. Click the Mechanical Drawings link available on the GA800 Product Details page at www.yaskawa.com.

Table 70: 480 V, Type 1, Normal Duty

Type 1 Configured (ND) G8C1 . .	Amps	Nominal HP	Physical Dimensions (in.)			Weight (lb) [1]	Drawing Number [2]
			H	W	D		
B002	2.1	1	28.8	18.3	14.3	80	DD.G.1.W1.01
B003	3.4	2					
B004	4.8	3				84	
B007	7.6	5					
B011	11	7.5				86	
B014	14	10				89	
B021	21	15	34.8	20.8	14.4	118	DD.G.1.W2.01
B027	27	20					
B034	34	25	39.8	25.8	15.9	147	DD.G.1.W3.01
B040	40	30				153	
B052	52	40				168	
B065	65	50	50.8	32.9	18.3	246	DD.G.1.W4.01
B077	77	60				259	
B096	96	75				276	
B124	124	100				306	
B156	156	125				319	
B180	180	150	85.7	41.3	34.1	785	DD.G.1.F1.01
B240	240	200				812	
B302	302	250				842	
B361	361	300				1010	
B414	414	350				1065	
B477	477	400				1511	
B515	515	450				1566	
B590	590	500				1630	
B720	720	600					
B810	810	700	98.9	41.2	38.7	1765	DD.G.112.F1T.01
B930	930	800					
BK09	1090	900				1985	
BK20	1200	1000					

1. This data represents the average drive package weight only, not shipping weight.
2. The drawings are available in .pdf, .doc., and .dwg formats. For additional formats, click the Mechanical Drawings link available on the GA800 Product Details page at www.yaskawa.com.

Table 71: 480 V, Type 1, Heavy Duty

Type 1 Configured (HD) G8C4 . .	Amps	Nominal HP	Physical Dimensions (in.)			Weight (lb) [1]	Drawing Number [2]
			H	W	D		
B002	2.1	1	28.8	18.3	14.3	80	DD.G.1.W1.01
B003	3.4	2					
B004	4.8	3				85	
B007	7.6	5					
B011	11	7.5				90	
B014	14	10					
B021	21	15	34.8	20.8	14.4	120	DD.G.1.W2.01
B027	27	20					
B034	34	25	39.8	25.8	15.9	150	DD.G.1.W3.01
B040	40	30				164	
B052	52	40	50.8	32.9	18.3	242	DD.G.1.W4.01
B065	65	50				256	
B077	77	60				266	
B096	96	75				301	
B124	124	100				308	
B156	156	125	85.7	41.3	34.1	761	DD.G.1.F1.01
B180	180	150				771	
B240	240	200				818	
B302	302	250				951	
B361	361	300				1021	
B414	414	350				1487	
B477	477	400				1531	
B515	515	450				1608	
B590	590	500					
B720	720	600	98.9	41.2	38.7	1720	DD.G.112.F1T.01
B810	810	700				1765	
B930	930	800				1878	
BK09	1090	900				1965	

1. This data represents the average drive package weight only, not shipping weight.
2. The drawings are available in .pdf, .doc., and .dwg formats. For additional formats, click the Mechanical Drawings link available on the GA800 Product Details page at www.yaskawa.com.

Type 12 Configured Package Dimensions

Table 72: 240 V, Type 12, Normal Duty

Type 12 Configured (ND) G8C2 . .	Amps	Nominal HP	Physical Dimensions (in.)			Weight (lb) [1]	Drawing Number [2]
			H	W	D		
A004	4.2	1	29.0	18.0	18.4	110	DD.G.12.W1.01
A006	6.8	2					
A009	9.6	3					
A015	15.2	5					
A022	22	7.5	35.0	20.5	18.4	134	DD.G.12.W2.01
A028	28	10					
A042	42	15	40.0	25.5	18.4	170	DD.G.12.W3.01
A054	54	20				183	
A068	68	25				187	
A080	80	30				192	
A104	104	40	51.0	32.6	22.5	262	DD.G.12.W4.01
A130	130	50				277	
A154	154	60				333	
A192	192	75	85.7	41.3	34.2	545	DD.G.12.F1.01
A248	248	100				645	
A312	312	125				698	
A360	360	150				800	

1. This data represents the average drive package weight only, not shipping weight.
2. The drawings are available in .pdf, .doc., and .dwg formats. For additional formats, click the Mechanical Drawings link available on the GA800 Product Details page at www.yaskawa.com.

Table 73: 240V, Type 12, Heavy Duty

Type 12 Configured (HD) G8C5 . .	Amps	Nominal HP	Physical Dimensions (in.)			Weight (lb) [1]	Drawing Number [2]
			H	W	D		
A004	4.2	1	29.0	18.0	18.4	110	DD.G.12.W1.01
A006	6.8	2					
A009	9.6	3					
A015	15.2	5					
A022	22	7.5					
A028	28	10	35.0	20.5	18.4	129	DD.G.12.W2.01
A042	42	15				142	
A054	54	20	40.0	25.5	18.4	184	DD.G.12.W3.01
A068	68	25				188	
A080	80	30	51.0	32.6	22.5	255	DD.G.12.W4.01
A104	104	40				273	
A130	130	50				332	
A154	154	60				338	
A192	192	75	85.7	41.3	34.2	636	DD.G.12.F1.01
A248	248	100				684	
A312	312	125				788	
A360	360	150				822	

1. This data represents the average drive package weight only, not shipping weight.
2. The drawings are available in .pdf, .doc., and .dwg formats. For additional formats, click the Mechanical Drawings link available on the GA800 Product Details page at www.yaskawa.com.

Table 74: 480 V, Type 12, Normal Duty

Type 12 Configured (ND) G8C2 . .	Amps	Nominal HP	Physical Dimensions (in.)			Weight (lb) [1]	Drawing Number [2]
			H	W	D		
B002	2.1	1	29.0	18.0	18.4	110	DD.G.12.W1.01
B003	3.4	2					
B004	4.8	3					
B007	7.6	5					
B011	11	7.5					
B014	14	10					
B021	21	15	35.0	20.5	18.4	139	DD.G.12.W2.01
B027	27	20					
B034	34	25	40.0	25.5	18.4	172	DD.G.12.W3.01
B040	40	30				180	
B052	52	40				194	
B065	65	50	51.0	32.6	22.5	246	DD.G.12.W4.01
B077	77	60				265	
B096	96	75				279	
B124	124	100				313	
B156	156	125				327	
B180	180	150	85.7	41.3	34.2	643	DD.G.12.F1.01
B240	240	200				676	
B302	302	250				706	
B361	361	300				873	
B414	414	350				932	
B477	477	400				1384	
B515	515	450				1441	
B590	590	500				1494	
B720	720	600				1520	
B810	810	700	98.9	41.2	38.7	1765	DD.G.112.F1T.01
B930	930	800					
BK09	1090	900				1985	
BK20	1200	1000					

1. This data represents the average drive package weight only, not shipping weight.
2. The drawings are available in .pdf, .doc., and .dwg formats. For additional formats, click the Mechanical Drawings link available on the GA800 Product Details page at. www.yaskawa.com.

Table 75: 480 V, Type 12, Heavy Duty

Type 12 Configured (HD) G8C5 . .	Amps	Nominal HP	Physical Dimensions (in.)			Weight (lb) [1]	Drawing Number [2]
			H	W	D		
B002	2.1	1	29.0	18.0	18.4	110	DD.G.12.W1.01
B003	3.4	2					
B004	4.8	3					
B007	7.6	5					
B011	11	7.5					
B014	14	10					
B021	21	15	35.0	20.5	18.4	140	DD.G.12.W2.01
B027	27	20					
B034	34	25	40.0	25.5	18.4	177	DD.G.12.W3.01
B040	40	30				189	
B052	52	40	51.0	32.6	22.5	264	DD.G.12.W4.01
B065	65	50				292	
B077	77	60				300	
B096	96	75				321	
B124	124	100				326	
B156	156	125	85.7	41.1	34.2	647	DD.G.12.F1.01
B180	180	150				658	
B240	240	200				755	
B302	302	250				810	
B361	361	300				865	
B414	414	350				1342	
B477	477	400				1449	
B515	515	450				1488	
B590	590	500				1531	
B720	720	600	98.9	41.2	38.7	1720	DD.G.112.F1T.01
B810	810	700				1765	
B930	930	800				1878	
BK09	1090	900				1965	

1. This data represents the average drive package weight only, not shipping weight.
2. The drawings are available in .pdf, .doc., and .dwg formats. For additional formats, click the Mechanical Drawings link available on the GA800 Product Details page at www.yaskawa.com.

Type 3R Configured Package Dimensions

Table 76: 240 V, Type 3R, Normal Duty

Type 3R Configured (ND) G8C3 . .	Amps	Nominal HP	Physical Dimensions (in.)			Weight (lb) [1]	Drawing Number [2]
			H	W	D		
A004	4.2	1	29.0	21.2	21.5	140	DD.G.3R.W1.01 [3]
A006	6.8	2					
A009	9.6	3					
A015	15.2	5				150	
A022	22	7.5	35.0	23.7	21.5	175	DD.G.3R.W2.01[3]
A028	28	10					
A042	42	15	40.0	28.7	21.5	225	DD.G.3R.W3.01[3]
A054	54	20				235	
A068	68	25				250	
A080	80	30					
A104	104	40	51.0	39.0	21.5	350	DD.G.3R.W4.01[3]
A130	130	50				375	
A154	154	60				400	
A192	192	75	92.6	41.2	48.7	875	DD.G.3R.F1.01
A248	248	100				950	
A312	312	125				1000	
A360	360	150				1100	

1. This data represents the average drive package weight only, not shipping weight.
2. The drawings are available in .pdf, .doc., and .dwg formats. For additional formats, click the Mechanical Drawings link available on the GA800 Product Details page at www.yaskawa.com.
3. Optional Freestanding Leg kits are available for Type 3R enclosures.

Table 77: 240 V, Type 3R, Heavy Duty

Type 3R Configured (HD) G8C6 . .	Amps	Nominal HP	Physical Dimensions (in.)			Weight (lb) [1]	Drawing Number [2]
			H	W	D		
A004	4.2	1	29.0	21.2	21.5	140	DD.G.3R.W1.01[3]
A006	6.8	2					
A009	9.6	3					
A015	15.2	5				150	
A022	22	7.5					
A028	28	10	35.0	23.7	21.5	175	DD.G.3R.W2.01[3]
A042	42	15				185	
A054	54	20	40.0	28.7	21.5	240	DD.G.3R.W3.01[3]
A068	68	25					
A080	80	30	51.0	39.0	21.5	350	DD.G.3R.W4.01[3]
A104	104	40				375	
A130	130	50				400	
A154	154	60				415	
A192	192	75	92.6	41.2	48.7	925	DD.G.3R.F1.01
A248	248	100				950	
A312	312	125				1075	
A360	360	150				1150	

1. This data represents the average drive package weight only, not shipping weight.
2. The drawings are available in .pdf, .doc., and .dwg formats. For additional formats, click the Mechanical Drawings link available on the GA800 Product Details page at www.yaskawa.com.
3. Optional Freestanding Leg kits are available for Type 3R enclosures.

Table 78: 480 V, Type 3R, Normal Duty

Type 3R Configured (ND) G8C3 . .	Amps	Nominal HP	Physical Dimensions (in.)			Weight (lb) [1]	Drawing Number [2]
			H	W	D		
B002	2.1	1	29.0	21.2	21.5	140	DD.G.3R.W1.01[3]
B003	3.4	2					
B004	4.8	3					
B007	7.6	5					
B011	11	7.5					
B014	14	10				150	
B021	21	15	35.0	23.7	21.5	175	DD.G.3R.W2.01[3]
B027	27	20					
B034	34	25	40.0	28.7	21.5	225	DD.G.3R.W3.01[3]
B040	40	30				235	
B052	52	40	51.0	39.0	21.5	325	DD.G.3R.W4.01[3]
B065	65	50				350	
B077	77	60				375	
B096	96	75					
B124	124	100				410	
B156	156	125				425	

Type 3R Configured (ND) G8C3 . .	Amps	Nominal HP	Physical Dimensions (in.)			Weight (lb) [1]	Drawing Number [2]
			H	W	D		
B180	180	150	92.6	41.2	48.7	950	DD.G.3R.F1.01
B240	240	200				975	
B302	302	250				1000	
B361	361	300				1150	
B414	414	350				1175	
B477	477	400	94.0	66.3	50.0	1400	DD.G.3R.F2.01
B515	515	450				1500	
B590	590	500				1550	
B720	720	600				1575	
B810	810	700	94.0	69.6	57.4	2304	DD.G.3R.F2.02
B930	930	800					
BK09	1090	900				2463	
BK20	1200	1000					

1. This data represents the average drive package weight only, not shipping weight.
2. The drawings are available in .pdf, .doc., and .dwg formats. For additional formats, click the Mechanical Drawings link available on the GA800 Product Details page at www.yaskawa.com.
3. Optional Freestanding Leg kits are available for Type 3R enclosures.

Table 79: 480 V, Type 3R, Heavy Duty

Type 3R Configured (HD) G8C6 . .	Amps	Nominal HP	Physical Dimensions (in.)			Weight (lb) [1]	Drawing Number [2]
			H	W	D		
B002	2.1	1	29.0	21.2	21.5	140	DD.G.3R.W1.01 [3]
B003	3.4	2					
B004	4.8	3					
B007	7.6	5					
B011	11	7.5					
B014	14	10				150	
B021	21	15	35.0	23.7	21.5	185	DD.G.3R.W2.01 [3]
B027	27	20					
B034	34	25	40.0	28.7	21.5	225	DD.G.3R.W3.01 [3]
B040	40	30				240	
B052	52	40	51.0	39.0	21.5	330	DD.G.3R.W4.01 [3]
B065	65	50				375	
B077	77	60					
B096	96	75				400	
B124	124	100				415	
B156	156	125	92.6	41.2	48.7	925	DD.G.3R.F1.01
B180	180	150				950	
B240	240	200				975	
B302	302	250				1125	
B361	361	300				1175	
B414	414	350	94.0	66.3	50.0	1400	DD.G.3R.F2.01
B477	477	400					
B515	515	450				1500	
B590	590	500					
B720	720	600	94.0	69.6	57.4	2304	DD.G.3R.F2.02
B810	810	700					
B930	930	800				2463	
BK09	1090	900					

1. This data represents the average drive package weight only, not shipping weight.
2. The drawings are available in .pdf, .doc., and .dwg formats. For additional formats, click the Mechanical Drawings link available on the GA800 Product Details page at www.yaskawa.com.
3. Optional Freestanding Leg kits are available for Type 3R enclosures.

GA800 Technical Data

Common Specifications

Item	Specification
Overload Capacity	150% for 60 sec. (HD), 110% for 60 sec. (ND)
Output Frequency	0 to 590 Hz
Control Methods	Open and Closed Loop Vector, Open and Closed Loop V/f
Motor Types	Induction, Surface Permanent Magnet, Interior Permanent Magnet, Synchronous Reluctance
Input Voltages & Frequency	**240 V Class**: 200V -15% to 240V +10%, 50/60 Hz +/-5%, **480 V Class**: 380V -15% to 480V +10%, 50/60 Hz +/-5%, **600 V Class**: 480V -10% to 600V +10%, 50/60 Hz +/-5%, **All Voltage Classes**: Overvoltage Category III
Protective Design Types	IP20 (Type 1 kit available)
	Flange (Type 12 backside)
	IP00/20 (model dependent)
Contamination Resistance	Pollution degree 2 or less. Additionally, meets IEC 60721-3-3, Class 3C2 (chemical gases), Class 3S3 (solid particles)
Ambient Operating Temperature	-10 to +50 °C (IP20 and flange types)
	-10 to +40 °C (with Type1 kit)
	Up to +60 °C (with derate)
Humidity	95% Relative Humidity or less in a non-condensing environment
Altitude	Up to 1000 m (3280 ft) without derating, up to 4000 m (13123 ft) with derating
Vibration	10 Hz to 20 Hz: 1 G (9.8 m/s2, 32.15 ft/s^2) 20 Hz to 55 Hz: 2004 to 2211, 4002 to 4168: 0.6 G (5.9 m/s2, 19.36 ft/s^2) 2257 to 2415, 4208 to 4H12, 5125 to 5472: 0.2 G (2.0 m/s^2, 6.56 ft/s^2)
Global Certifications	UL, CSA, CE, RCM, RoHS, SEMI-F47, IEEE1668
Functional Safety	Safe Torque Off, SIL3 according to IEC 62061, PLe according to ISO 13849-1 (600 V models pending, consult factory)
Standard I/O	(8) multi-function digital inputs (24 Vdc)
	(3) multi-function analog inputs (0 +/- 10 Vdc, 4-20 mA)
	(1) multi-function pulse input
	(2) Safe Torque Off inputs
	(1) fault relay output (form C)
	(3) multi-function relay outputs (form A)
	(2) multi-function analog outputs (0 +/- 10 Vdc, 4-20 mA)
	(1) multi-function pulse output
I/O Expansion (optional)	(3) Analog Inputs -10 to +10 V, 13 bit plus sign, 4 to 20 mA
	(16) Digital Inputs
	(2) Analog Outputs (-10 to +10 V, 11 bit magnitude)
	(8) Digital Outputs (6 transistor, 2 relay)
Feedback (optional)	Incremental
	Absolute (Stegmann, Heidenhain, Resolver)
Network Communication	Standard: Modbus RTU, RS-485, 115 kbps
	Optional: EtherNet/IP, DeviceNet, Modbus TCP/IP, PROFINET, PROFIBUS-DP

Item	Specification
Speed Control Range	1500:1 Closed Loop Vector (IM and PM Motors)
	200:1 Open Loop Vector (IM Motors)
	100:1 Open Loop Vector (PM Motors)
Speed Control Accuracy	≤0.02 %: Closed Loop Vector; ≤0. 2%: Open Loop Vector
Speed Response	≥50 Hz: Closed Loop Vector (Induction Motors); ≥250 Hz: Closed Loop Vector (PM Motors) ≥20 Hz: Open Loop Vector (Induction Motors); ≥40 Hz: Open Loop Vector (PM Motors)
Function Block Diagrams	Up to 200 connections, 500 µs program scan time

Short Circuit Protection

Table 68: 240 Volt Model Required Short Circuit Protection

Drive Catalog Code GA80U	Drive Mounted without Supplemental Enclosure (Using UL Type 1 Kit)		Drive Mounted in Supplemental Enclosure					
			Any Size Protected Enclosure (Ventilated/Non-Ventilated)		Restricted Size Protected Enclosure (Ventilated Only)			
	Semiconductor Fuse Manufacturer: EATON/ Bussmann (Permitted Only in UL Type 1 Kit)	Class CC, J, or T Fuse Maximum Amps (A) (Permitted in Same or Separate Enclosure)	Semiconductor Fuse Manufacturer: EATON/ Bussmann (Drive and Fuse in Same Enclosure Only)	Class CC, J, or T Fuse Maximum Amps (A) (Permitted in Same or Separate Enclosure)	These Devices Permitted in Same or Separate Enclosure			
					Class CC, J, or T Fuse Maximum Amps (A)	MCCB Maximum Amps (A)	Class RK1 or RK5 Fuse Maximum Amps (A)	Minimum Enclosure Volume (in^3)
2004	N/A[1]	7	FWH-45B	7	[2]	15	7	4195
2006	N/A[1]	10	FWH-45B	10	[2]	15	10	4195
2008	N/A[1]	12	FWH-45B	12	[2]	15	12	4195
2010	N/A[1]	15	FWH-45B	15	[2]	15	15	4195
2012	N/A[1]	20	FWH-50B, FWH-80B	20	[2]	20	20	4195
2018	N/A[1]	30	FWH-80B, FWH-100B	30	[2]	35	30	4195
2021	N/A[1]	35	FWH-80B, FWH-100B	35	[2]	40	35	4195
2030	N/A[1]	50	FWH-100B, FWH-125B	50	[2]	60	50	4195
2042	N/A[1]	70	FWH-150B	70	[2]	80	70	4195
2056	N/A[1]	90	FWH-200B	90	[2]	110	90	4195

Drive Catalog Code GA80U	Drive Mounted without Supplemental Enclosure (Using UL Type 1 Kit)		Drive Mounted in Supplemental Enclosure					
			Any Size Protected Enclosure (Ventilated/Non-Ventilated)		Restricted Size Protected Enclosure (Ventilated Only)			
	Semiconductor Fuse Manufacturer: EATON/ Bussmann (Permitted Only in UL Type 1 Kit)	Class CC, J, or T Fuse Maximum Amps (A) (Permitted in Same or Separate Enclosure)	Semiconductor Fuse Manufacturer: EATON/ Bussmann (Drive and Fuse in Same Enclosure Only)	Class CC, J, or T Fuse Maximum Amps (A) (Permitted in Same or Separate Enclosure)	These Devices Permitted in Same or Separate Enclosure			
					Class CC, J, or T Fuse Maximum Amps (A)	MCCB Maximum Amps (A)	Class RK1 or RK5 Fuse Maximum Amps (A)	Minimum Enclosure Volume (in^3)
2070	N/A[1]	110	FWH-200B, FWH-225A	110	[2]	125	110	4195
2082	N/A[1]	125	FWH-225A, FWH-250A	125	[2]	150	125	4195
2110	N/A[1]	175	FWH-225A, FWH-250A	175	[2]	200	175	10121
2138	N/A[1]	225	FWH-275A, FWH-300A	225	[2]	250	225	10121
2169	N/A[1]	250	FWH-275A, FWH-350A	250	[2]	300	250	10121
2211	N/A[1]	350	FWH-325A, FWH-450A	350	[2]	400	350	10121
2257	N/A[1]	400	FWH-600A	400	[2]	500	400	14657
2313	N/A[1]	500	FWH-700A, FWH-800A	500	[2]	600	500	14657
2630	N/A[1]	600	FWH-800A, FWH-1000B	600	[2]	700	600	52800
2415	N/A[1]	700	FWH-1000B	700	[2]	800	N/A	52800

1. The UL Type kit does not support internal fuses for this drive model.
2. Enclosure volume is not restricted. Refer to the values in “Any Size Protected Enclosure (Ventilated/Non-Ventilated)” column for details on the fuses.

Table 69: 480 Volt Model Required Short Circuit Protection

Drive Catalog Code GA80U	Drive Mounted without Supplemental Enclosure (Using UL Type 1 Kit)		Drive Mounted in Supplemental Enclosure					
			Any Size Protected Enclosure (Ventilated/Non-Ventilated)		Restricted Size Protected Enclosure (Ventilated Only)			
	Semiconductor Fuse Manufacturer: EATON/ Bussmann (Permitted Only in UL Type 1 Kit)	Class CC, J, or T Fuse Maximum Amps (A) (Permitted in Same or Separate Enclosure)	Semiconductor Fuse Manufacturer: EATON/ Bussmann (Drive and Fuse in Same Enclosure Only)	Class CC, J, or T Fuse Maximum Amps (A) (Permitted in Same or Separate Enclosure)	These Devices Permitted in Same or Separate Enclosure			
					Class CC, J, or T Fuse Maximum Amps (A)	MCCB Maximum Amps (A)	Class RK1 or RK5 Fuse Maximum Amps (A)	Minimum Enclosure Volume (in^3)
4002	N/A[1]	3.5	FWH-40B, FWH-50B	3.5	[2]	15	3.5	4195
4004	N/A[1]	7	FWH-50B	7	[2]	15	7	4195
4005	N/A[1]	9	FWH-50B	9	[2]	15	9	4195
4007	N/A[1]	12	FWH-60B	12	[2]	15	12	4195
4009	N/A[1]	15	FWH-60B	15	[2]	15	15	4195
4012	N/A[1]	20	FWH-60B	20	[2]	20	20	4195
4018	N/A[1]	30	FWH-80B	30	[2]	35	30	4195
4023	N/A[1]	40	FWH-90B	40	[2]	45	40	4195
4031	N/A[1]	50	FWH-125B, FWH-150B	50	[2]	60	50	4195
4038	N/A[1]	60	FWH-200B	60	[2]	75	60	4195
4044	N/A[1]	70	FWH-200B	70	[2]	80	70	4195
4060	N/A[1]	100	FWH-225A	100	[2]	110	100	4195
4075	N/A[1]	125	FWH-250A	125	[2]	150	125	10121
4089	N/A[1]	150	FWH-250A, FWH-275A	150	[2]	175	150	10121
4103	N/A[1]	175	FWH-250A, FWH-275A	175	[2]	200	175	10121
4140	N/A[1]	225	FWH-300A	225	[2]	250	225	10121
4168	N/A[1]	250	FWH-325A, FWH-400A	250	[2]	300	250	10121
4208	N/A[1]	350	FWH-500A	350	[2]	400	350	14657
4250	N/A[1]	400	FWH-600A	400	[2]	500	400	14657
4302	N/A[1]	500	FWH-700A	500	[2]	600	500	14657

Drive Catalog Code GA80U	Drive Mounted without Supplemental Enclosure (Using UL Type 1 Kit)		Drive Mounted in Supplemental Enclosure					
			Any Size Protected Enclosure (Ventilated/Non-Ventilated)		Restricted Size Protected Enclosure (Ventilated Only)			
	Semiconductor Fuse Manufacturer: EATON/ Bussmann (Permitted Only in UL Type 1 Kit)	Class CC, J, or T Fuse Maximum Amps (A) (Permitted in Same or Separate Enclosure)	Semiconductor Fuse Manufacturer: EATON/ Bussmann (Drive and Fuse in Same Enclosure Only)	Class CC, J, or T Fuse Maximum Amps (A) (Permitted in Same or Separate Enclosure)	These Devices Permitted in Same or Separate Enclosure			
					Class CC, J, or T Fuse Maximum Amps (A)	MCCB Maximum Amps (A)	Class RK1 or RK5 Fuse Maximum Amps (A)	Minimum Enclosure Volume (in^3)
4371	FWH-800A	N/A[3]	FWH-800A	N/A[4]	600	700	600	52800
4414	FWH-800A, FWH-1000B	N/A[3]	FWH-800A, FWH-1000B	N/A[4]	700	800	N/A	52800
4477	FWH-1000B, FWH-1200B	N/A[3]	FWH-1000B, FWH-1200B	N/A[4]	800	900	N/A	52800
4568	FWH-1000B, FWH-1200B	N/A[3]	FWH-1000B, FWH-1200B	N/A[4]	900	1000	N/A	52800
4605	FWH-1200B, FWH-1400A	N/A[3]	FWH-1200B, FWH-1400A	N/A[4]	1000	1200	N/A	52800
4720	FWH-1200B, FWH-1400A	N/A[3]	FWH-1200B, FWH-1400A	N/A[4]	1200	1400	N/A	52800
4810	N/A	N/A	FWH-1200B	N/A	N/A	N/A	N/A	N/A
4930	N/A	N/A	FWH-1200B	N/A	N/A	N/A	N/A	N/A
4H11	N/A	N/A	FWH-1600A	N/A	N/A	N/A	N/A	N/A
4H12	N/A	N/A	FWH-1600A	N/A	N/A	N/A	N/A	N/A

1. The UL Type kit does not support internal fuses for this drive model.
2. Enclosure volume is not restricted. Refer to the values in “Any Size Protected Enclosure (Ventilated/Non-Ventilated)” column for details on the fuses.
3. You cannot use Class CC, J, or T Fuses. Use semiconductor fuses.
4. You cannot use Class CC, J, or T Fuses. Install the fuses into an enclosure with the necessary minimum enclosure volume.

Table 70: 480 Volt 6-Phase/12-Pulse Required Short Circuit Protection

Drive Catalog Code GA80U	Semiconductor Protection Fuse Manufacturer: EATON/Bussmann
4810	FWH-1000B
4930	FWH-1000B
4H11	FWH-1200B
4H12	FWH-1200B
T103	FWH-200B
T140	FWH-225A

Drive Catalog Code GA80U	Semiconductor Protection Fuse Manufacturer: EATON/Bussmann
T168	FWH-225A
T208	FWH-275A
T250	FWH-300A
T302	FWH-350A
T371	FWH-400A
T414	FWH-450A
T477	FWH-600A
T568	FWH-600A
T605	FWH-800A
T720	FWH-800A

Table 71: 600 Volt Required Short Circuit Protection

Drive Catalog Code GA80U	Semiconductor Fuses [1]		
	Manufacturer	Part Number	Maximum SCCR (Fuse-Drive Combination)
5125	Mersen	A070UD31LI250	100 kA
5144	Mersen	A070UD31LI250	100 kA
5192	Mersen	A070UD32LI315	100 kA
5242	Mersen	A070UD32LI350	100 kA
5289	Mersen	A070UD32LI400	100 kA
5382	EATON/Bussmann	FWP-600A	100 kA
5412	EATON/Bussmann	FWP-600A	100 kA
5472	EATON/Bussmann	FWP-700A	100 kA

1. When semiconductor fuses are used for UL listed drive protection, the drives and fusing must be in the same enclosure. Where multiple semiconductor fuse ratings are listed for a single drive, Yaskawa recommends the larger fuse for cyclical load applications that frequently approach 150% overload. Smaller semiconductor fuses (than what is listed) of the same manufacturer and series are permitted; however, this may cause fuses to clear prematurely.

Watt Loss

Table 72: 240 Volt Model Watt Loss

Catalog Code GA80U . .	240 V Normal Duty					240 V Heavy Duty				
	Rated Output Current A	Carrier Frequency kHz	Interior Unit Loss W	Cooling Fin Loss W	Total Loss W	Rated Output Current A	Carrier Frequency kHz	Interior Unit Loss W	Cooling Fin Loss W	Total Loss W
2004. . .	4.2	2	35	18	53	3.5	8	35	19	54
2006. . .	6	2	38	25	63	5	8	37	26	63
2008. . .	8	2	42	34	76	6.9	8	40	36	76
2010. . .	9.6	2	49	46	95	8	8	44	43	87
2012. . .	12.2	2	56	62	118	11	8	50	61	111
2018. . .	17.5	2	53	88	141	14	8	47	82	129
2021. . .	21	2	75	125	200	17.5	8	56	105	161
2030. . .	30	2	95	206	301	25	8	74	174	248
2042. . .	42	2	129	227	356	33	8	88	183	271
2056. . .	56	2	149	302	451	47	8	112	267	379
2070. . .	70	2	177	403	580	60	8	145	373	518
2082. . .	82	2	202	467	669	75	8	179	478	657
2110. . .	110	2	192	631	823	88	8	155	563	718
2138. . .	138	2	269	814	1083	115	8	212	680	892
2169. . .	169	2	338	941	1279	145	5	275	820	1095
2211. . .	211	2	384	1131	1515	180	5	314	991	1305
2257. . .	257	2	519	1534	2053	215	5	398	1252	1650
2313. . .	313	2	579	1794	2373	283	5	502	1643	2145
2360. . .	360	2	655	2071	2726	346	5	582	1978	2560
2415. . .	415	2	608	2156	2764	415	5	644	2359	3003

Note: Refer to the GA800 Drive Technical Reference (SIEPC71061737) for detailed Carrier Frequency Watt Loss information.

Table 73: 480 Volt Model Watt Loss

Catalog Code GA80U . .	480 V Normal Duty					480 V Heavy Duty				
	Rated Output Current A	Carrier Frequency kHz	Interior Unit Loss W	Cooling Fin Loss W	Total Loss W	Rated Output Current A	Carrier Frequency kHz	Interior Unit Loss W	Cooling Fin Loss W	Total Loss W
4002. . .	2.1	2	39	16	55	1.8	8	38	15	53
4004. . .	4.1	2	44	33	77	3.4	8	42	28	70
4005. . .	5.4	2	48	31	79	4.8	8	46	37	83
4007. . .	7.1	2	52	44	96	5.5	8	48	45	93
4009. . .	8.9	2	42	58	100	7.2	8	37	63	98
4012. . .	11.9	2	57	84	141	9.2	8	46	82	128
4018. . .	17.5	2	82	144	226	14.8	8	65	140	205
4023. . .	23.4	2	108	185	293	18	8	73	150	223
4031. . .	31	2	138	222	360	24	8	101	211	312
4038. . .	38	2	145	270	415	31	8	119	272	391
4044. . .	44	2	168	335	503	39	8	148	354	502
4060. . .	59.6	2	157	444	601	45	8	126	389	515
4075. . .	74.9	2	185	527	712	60	8	165	527	692
4089. . .	89.2	2	212	665	877	75	8	184	617	801
4103. . .	103	2	264	766	1030	91	8	237	779	1016
4140. . .	140	2	393	1126	1519	112	5	300	956	1256
4168. . .	168	2	574	1348	1922	150	5	486	1274	1760
4208. . .	208	2	493	1465	1958	180	5	446	1432	1878
4250. . .	250	2	686	1738	2424	216	5	558	1464	2022
4302. . .	302	2	817	2257	3074	260	5	692	2061	2753
4371. . .	371	2	1022	2553	3575	304	5	824	2346	3170
4414. . .	414	2	873	2422	3295	371	5	777	2212	2989
4477. . .	477	2	1183	3329	4512	414	2	963	2696	3659
4568. . .	568	2	1429	3989	5418	477	2	1183	3329	4512
4605. . .	675	2	1526	4572	6098	605	2	1328	3995	5323
4720. . .	720	2	1723	5184	6907	605	2	1395	4198	5593
4810. . .	810	2	2385	6626	9011	720	2	2036	5778	7814
4930. . .	930	2	2465	7613	10078	810	2	2120	6563	8683
4H11. . .	1090	2	3162	9020	12182	930	2	2690	7708	10398
4H12. . .	1200	2	3236	9931	13167	1090	2	2866	8917	11783

Note: Refer to the GA800 Drive Technical Reference (SIEPC71061737) for detailed Carrier Frequency Watt Loss information.

Table 74: 600 Volt Model Watt Loss

Catalog Code GA80U . .	600 V Normal Duty					600 V Heavy Duty				
	Rated Output Current A	Carrier Frequency kHz	Interior Unit Loss W	Cooling Fin Loss W	Total Loss W	Rated Output Current A	Carrier Frequency kHz	Interior Unit Loss W	Cooling Fin Loss W	Total Loss W
5125	125	2	309	1694	2003	99	2	259	1324	1583
5144	144	2	350	1966	2316	125	2	308	1652	1959
5192	192	2	542	2098	2641	172	2	440	1749	2188
5242	242	2	676	2632	3308	192	2	526	2040	2566
5289	289	2	778	3554	4332	242	2	642	2898	3540
5382	382	2	1106	4511	5617	382	2	964	3912	4876
5412	412	2	1234	4932	6166	412	2	1107	4474	5581
5472	472	2	1423	5687	7110	472	2	1234	4915	6149

Note: Refer to the GA800 600 V Drive Technical Reference (SIEPC7106170V) for detailed Carrier Frequency Watt Loss information.

Environmental Derating

The environment where the drive operates affects the drive output capacity. Ambient temperature, operating altitude, and drive configuration are used to determine the derate applied to the drive for safe and reliable operation.

Calculate drive derate based on the thermal environment

1) Determine the altitude of the installation.
2) Determine the average high ambient temperature of the installation.
3) Determine the protection rating of the installation (IP00, UL Type 1, etc.).
4) Use the protection rating to select the correct derating chart.
5) Determine the derate using the chart.

Example:

The drive installation is at 3000 meters, with an ambient temperature near 40 °C, and the drive configuration is for IP20 protection. Using the chart below and the given environmental conditions, derate the drive to 90 % of the drive's rated output current.

Figure 27: Example Derating Table

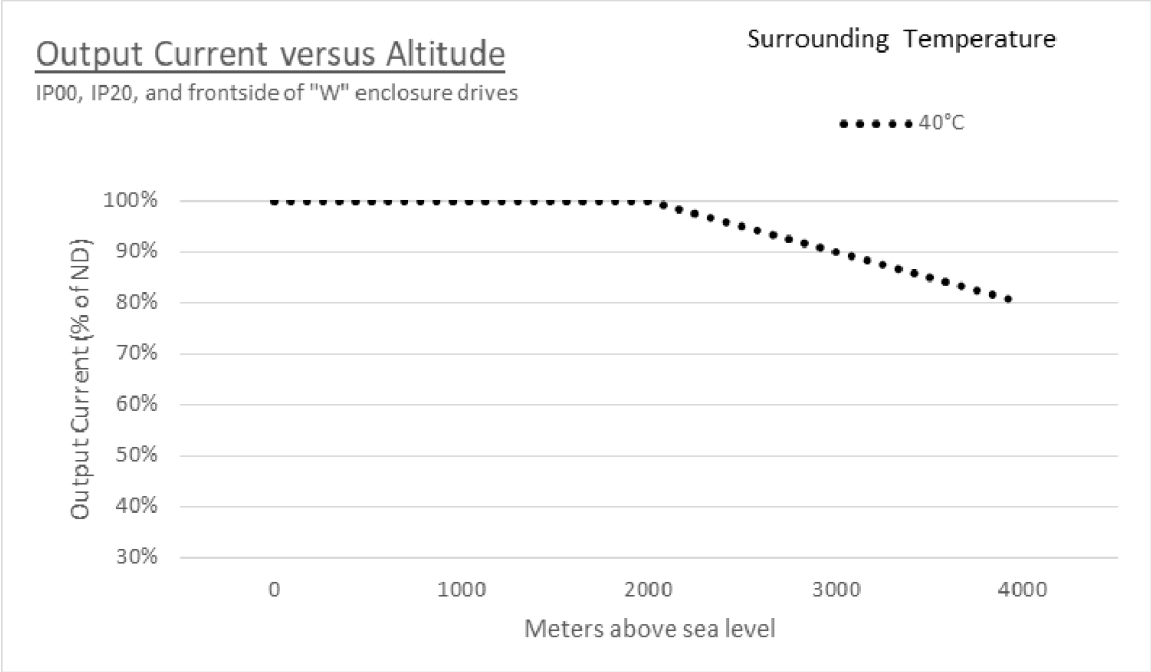

As altitude increases, air density decreases, lowering cooling capacity. Figure *28* and *29* provide derating information to protect Yaskawa drives from thermal incidents due ambient temperatures and the reduced cooling capacity of air at higher altitudes.

Figure 28:

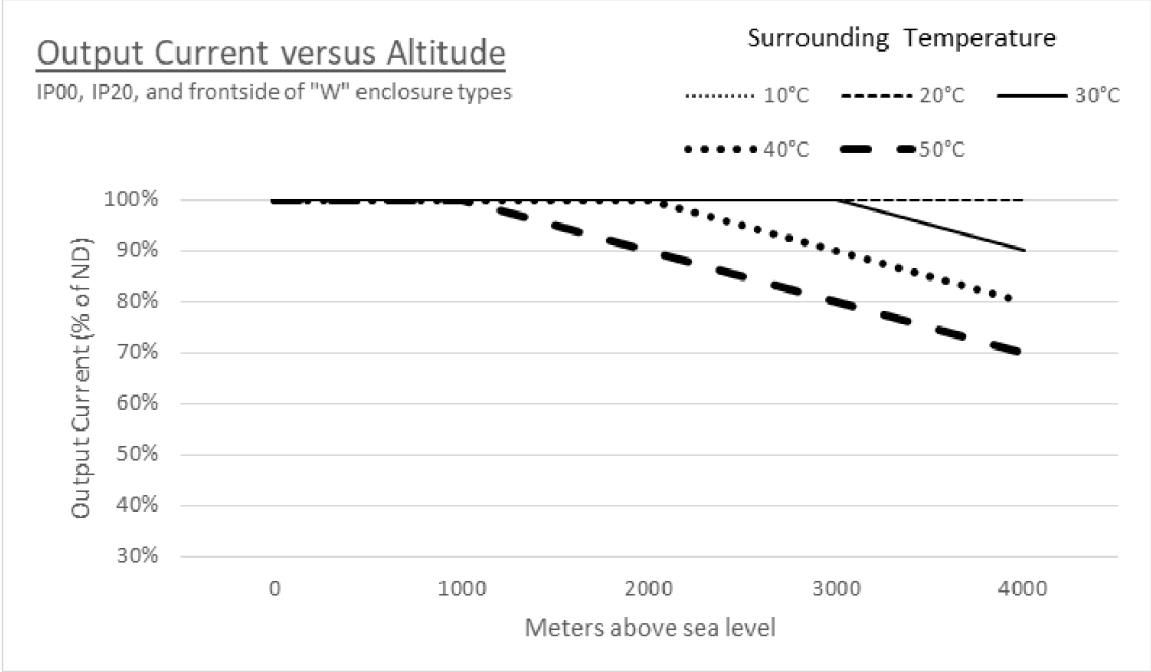

Figure 29:

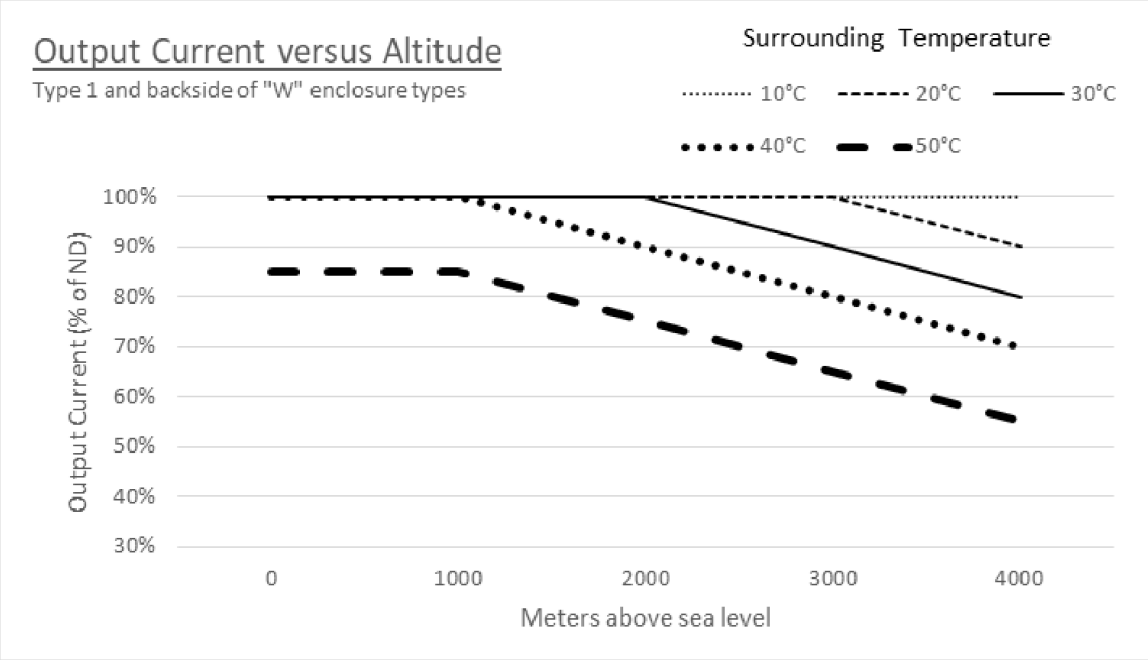

Voltage Derating Considerations based on Altitude

As altitude increases, air density decreases. According to Paschen's Law, this reduction in air density affects the insulating properties of air against arcing. There are two ways to protect against the reduction in insulation: lower the applied voltage or use a drive with a higher voltage class. This maintains safe operation of the drive installation and equipment. The following are guidelines for operating drives at high altitudes:

- When the installation altitude is 2000 m (6562 ft) or lower, decreasing of the applied voltage is not required regardless of the power supply connection method.
- When the installation altitude is higher than 2000 m (6562 ft), use a neutral grounding system power supply.
- Decreasing applied voltage is not required when the installation altitude is between 2000 m and 4000 m (6562 ft to 13123 ft) and the power supply is grounded to a neutral point.
- If the application falls outside of the above conditions, use a higher voltage class drive. For example, a 600 V drive running at 480 V will provide the proper insulation and safety margins.

These guidelines are intended for use with GA800 drives used in Overvoltage Category 3 installations. For installations with conditions other than described, please consult Yaskawa.

Carrier Frequency Derating

Table 75: 240 Volt Carrier Frequency Derating

Catalog Code GA80U . .	Carrier Frequency Derating (240 V Class) [1] [2]											
	Heavy Duty Rating Amps						Normal Duty Rating Amps					
	2 kHz	5 kHz	8 kHz	10 kHz	12.5 kHz	15 kHz	2 kHz	5 kHz	8 kHz	10 kHz	12.5 kHz	15 kHz
2004. . .	3.2	3.2	3.2	3.1	2.9	2.78	3.5	3.3	2.9	2.7	2.4	2.1
2006. . .	5	5	5	4.8	4.6	4.3	6	5.6	5	4.6	4.1	3.6
2010. . .	8	8	8	7.4	6.6	5.8	9.6	9	8	7.4	6.6	5.8
2012. . .	11	11	11	10.4	9.6	8.8	12	11.7	11	10.5	9.9	9.3
2018. . .	14	14	14	12.6	10.8	9.1	17.5	16.1	14	12.6	10.8	9.1
2021. . .	17.5	17.5	17.5	16.1	14.3	12.6	21	19.6	17	16.1	14.3	12.5
2030. . .	25	25	25	23	20.5	18	30	28	25	23	20.5	18
2042. . .	33	33	33	29.3	24.8	20.2	42	38.4	33	29.4	24.9	20.4
2056. . .	47	47	47	43.4	38.9	34.4	56	52.4	47	43.4	38.9	34.4
2070. . .	60	60	60	56	51	46	70	66	60	56	51	46
2082. . .	75	75	75	68.6	60.5	53	82	82	75	68.8	61	53.1
2110. . .	88	88	88	80.5	71	62	110	102.7	92	84.3	75.2	66
2138. . .	115	115	115	105.1	92.8	81	138	128.8	115	105.8	94.3	82.8
2169. . .	145	145	125.2	112	-	-	169	152.7	128.3	112	-	-
2211. . .	180	180	155.2	138.6	-	-	211	190.2	158.9	138.1	-	-
2257. . .	215	215	184.8	164.7	-	-	257	230.4	190.5	163.9	-	-
2313. . .	283	283	249	226.4	-	-	313	288.5	251.7	227.1	-	-
2360. . .	346	346	294.3	259.8	-	-	360	330.8	287.6	258.8	-	-
2415. . .	415	415	365.2	332	-	-	-	-	-	-	-	-

1. Applicable Motor Control Methods: GA800 Parameter A1-02 = 0, 1, 2, 3, 4, 5, 7, 8.
2. Refer to the GA800 Technical Manual for AOLV/PM Carrier Frequency Derating information.

Table 76: 480 Volt Carrier Frequency Derating

Catalog Code GA80U . .	Carrier Frequency and Rated Current Derating (480 V Class) [1] [2]											
	Heavy Duty Rating Amps						Normal Duty Rating Amps					
	2 kHz	5 kHz	8 kHz	10 kHz	12.5 kHz	15 kHz	2 kHz	5 kHz	8 kHz	10 kHz	12.5 kHz	15 kHz
4002. . .	1.8	1.8	1.8	1.6	1.3	1	2.1	2	1.8	1.7	1.5	1.4
4004. . .	3.4	3.4	3.4	2.9	2.3	1.7	4.1	3.8	3.4	3.1	2.8	2.4
4005. . .	4.8	4.8	4.8	4.3	3.7	3	5.4	5.2	4.8	4.6	4.3	3.9
4007. . .	5.5	5.5	5.5	4.9	4.1	3.2	7.1	6.5	5.5	4.8	4	3.2
4009. . .	7.2	7.2	7.2	6.5	5.6	4.8	8.9	8.2	7.2	6.5	5.6	4.8
4012. . .	9.2	9.2	9.2	8.1	6.8	5.4	11.9	10.8	9.2	8.1	6.7	5.4
4018. . .	14.8	14.8	14.8	13.1	11	8.9	17.5	17.3	14.8	13.1	11	8.9
4023. . .	18	18	18	15.9	13.4	10.8	23	21.5	18.3	16.2	13.6	11
4031. . .	24	24	24	21.2	17.7	14.1	31	28.2	24	21.1	17.6	14.1
4038. . .	31	31	31	27.5	23	18.6	38	36.3	31	27.5	23	18.6
4044. . .	39	39	39	34.5	29	23.4	44	43.6	37.5	33.5	28.4	23.4
4060. . .	45	45	45	39.1	31.8	24.4	60	53.7	44.9	39.1	31.7	24
4075. . .	60	60	60	53.1	44.6	36	75	73.8	62.9	55.6	46.5	37
4089. . .	75	75	75	66.4	55.7	45	89	88.8	75.8	67.2	56.4	46
4103. . .	91	91	91	80.6	67.6	54.6	103	103	90.3	80.1	67.3	55
4140. . .	112	112	91.8	78.4	-	-	140	122.8	96.7	79	-	-
4168. . .	150	150	123	105	-	-	168	150.5	124.4	107	-	-
4208. . .	180	180	147.6	126	-	-	208	179.7	137.2	109	-	-
4250. . .	216	216	177.1	151.2	-	-	250	221.8	179.4	151	-	-
4302. . .	260	260	213.2	182	-	-	296	263.4	218.9	186	-	-
4371. . .	304	304	249.3	212.8	-	-	371	327.2	261.6	218	-	-
4414. . .	371	371	304.2	259.7	-	-	414	371	304.7	261	-	-
4477. . .	414	345.7	-	-	-	-	477	367	-	-	-	-
4568. . .	477	398	-	-	-	-	568	437	-	-	-	-
4605. . .	605	505.2	-	-	-	-	675	529	-	-	-	-
4720. . .	605	505.2	-	-	-	-	720	564	-	-	-	-
4810. . .	720	600	-	-	-	-	810	624	-	-	-	-
4930. . .	810	675	-	-	-	-	930	716	-	-	-	-
4H11. . .	930	775	-	-	-	-	1090	852	-	-	-	-
4H12. . .	1090	908	-	-	-	-	1200	938	-	-	-	-

1. Applicable Motor Control Methods: GA800 Parameter A1-02 = 0, 1, 2, 3, 4, 5, 7, 8.
2. Refer to the GA800 Technical Manual for AOLV/PM Carrier Frequency Derating information.

Table 77: 600 Volt Carrier Frequency Derating

Catalog Code GA80U . .	Carrier Frequency and Rated Current Derating (600 V Class)											
	Heavy Duty Rating Amps						Normal Duty Rating Amps					
	2 kHz	5 kHz	8 kHz	10 kHz	12.5 kHz	15 kHz	2 kHz	5 kHz	8 kHz	10 kHz	12.5 kHz	15 kHz
5125. . .	99	75	N/A				125	90	N/A			
5144. . .	125	93					144	103				
5192. . .	172	133					192	144				
5242. . .	192	144					242	172				
5289. . .	242	200					289	226				
5382...	286						382					
5412...	382						412					
5472...	412						472					

Technical Training

Additional Information
Training Home Page

In today's world of global competition, it is impossible for a company to survive without "state-of-the-art" technically trained associates and customers. Yaskawa Technical Training Services (TTS) is comprised of engineers who are specialists in their field.

Yaskawa America has three training facilities in the United States. The primary training facility is in Yaskawa America's North American Headquarters in Waukegan, Illinois (45 miles north of Chicago, 50 miles south of Milwaukee). This facility has six training rooms; two lecture halls, two training rooms and two training labs.

Besides the possibility of attending training classes in Waukegan and Los Angeles, Yaskawa America can also bring training to the customer. On-site classes are available in two varieties. The first is to duplicate the official training classes at the customer's location. Full functioning demo units, data projector, computer and documentation can be shipped to recreate the official class on-site. The second variety is road show training. Road show training is a one-day training class that is specifically tailored to the students' needs and questions. Only basic demos are used and the topics covered in class are generated by the students in attendance.

The Yaskawa Virtual Training Room is another training option. All you need is an Internet connection and a telephone. This is a live, interactive training class, which gives you the ability to talk to the instructor as well as other students. The Internet connection allows us to show slides and demonstrate software packages. The telephone is for the audio portion of the training class. Web classes can be found on the Yaskawa formal training schedule and can also be done on-demand, per the time and preference of the customer.

To enroll, contact Technical Training Services.

Phone: 1-800-YASKAWA (1-800-927-5292), then dial 2 for "Drives" and 4 for "Training"

E-mail: training@yaskawa.com

Check out the latest class schedule and cut sheets at www.yaskawa.com

Terms and Conditions

YASKAWA AMERICA, INC. (“YAI”), DRIVES & MOTION TERMS AND CONDITIONS

1. GENERAL:

(a) All sales of products or services by Yaskawa America, Inc., Drives & Motion Division (hereinafter "D&M"), is governed exclusively by these Terms and Conditions of Sale ("Terms"), which supersede all inconsistent or additional terms on Buyer's purchase order or any other document. These Terms constitute the final, complete and exclusive agreement between the parties as to the subject matter hereof. These Terms may be amended only in writing signed by an authorized representative of D&M.
(b) Orders must be submitted in the form of a written purchase order or letter from Buyer, setting forth all information necessary for D&M to fill the Order, if accepted. All proposals, quotations or similar communications from D&M are considered invitations to submit an Order. A binding sales contract will result only when D&M accepts Buyer's Order, at D&M's office in Waukegan, Illinois or such other place as designated by D&M.

2. PRICES:

(a) D&M's quoted prices are firm for thirty (30) days from the date of D&M's written proposal. Thereafter, the applicable prices are those in effect at the time Buyer's Order is placed with D&M. D&M will notify Buyer of any price changes for incorporation into a revised Order prior to acceptance by D&M. Pricing based on volume discounts is subject to adjustment by D&M if actual shipping volumes do not meet minimum volume requirements of agreement. Clerical errors in any element of a proposal, purchase order, invoice or contract are subject to correction by D&M.

3. TERMS OF PAYMENT:

(a) All payments are due within thirty (30) days from date of D&M's invoice. Payment shall be made at the agreed time, to the place specified, and in the currency indicated on D&M's invoice. D&M reserves the right to require payment in advance, or satisfactory security, for any shipment or sale. D&M reserves the right to seek any other remedy available at law or equity and Buyer shall be liable for all expenses, including attorneys' fees, relating to the collection of past due amounts. Buyer's default constitutes a waiver of Buyer's right to demand D&M's performance under the contract.
(b) When an amount becomes past due according to its payment terms, Buyer shall pay interest on the balance due, at the greater of 1.50% per month (18% per annum) or the maximum permitted by law, until paid in full.
(c) If delivery and/or payment in installments is accepted by D&M, Buyer's failure to pay any installment when due shall give D&M the right to suspend work or delivery until such payment is made. In the event that any such default by Buyer continues for more than fifteen (15) days, D&M may then cancel the contract by written notice to Buyer.
(d) All duties, tariffs, fees, costs and other charges connected with shipment, insurance, exportation and importation of the products are the responsibility of Buyer, and, if paid by D&M, such expenses may be recovered by D&M from Buyer, and Buyer shall indemnify D&M against claims for the same. Buyer is responsible for all taxes applicable or related to this transaction, including all sales, use and excise taxes.

4. SECURITY INTEREST:
To secure any indebtedness due and owing from Buyer from time to time, Buyer hereby grants to D&M, and D&M hereby reserves, a continuing purchase money security interest in all Yaskawa-brand and other products heretofore or hereafter sold and delivered to Buyer by D&M, and all related parts, components and accessories therefor, and all proceeds arising from the sale or other disposition of the foregoing, including, but not limited to, cash, accounts, contract rights, accounts receivable, instruments and chattel paper. Buyer shall at no time grant any security interest that conflicts with that granted to D&M herein. Buyer shall cooperate with D&M, and hereby appoints D&M as its attorney-in-fact, to execute and file, on Buyer's behalf, any documents necessary to evidence and perfect D&M's security interest. D&M reserves all rights and remedies available to it under the Uniform Commercial Code and other applicable law in the event of Buyer's default.

5. SHIPMENT, FORCE MAJEURE, AND ERROR:
(a) Shipment/delivery dates are approximations only. D&M shall not be liable to pay any penalty or damages, including conse-

quential damages, for any delay in shipment.
(b) All shipments are F.O.B. D&M's (or its suppliers') manufacturing plant or warehouse. D&M will, at Buyer's expense, arrange for the transportation of the products from the manufacturing plant or warehouse designated by D&M. All products shall be packaged for domestic shipment in accordance with D&M's standard specifications. If special packaging is required, it must be clearly requested on Buyer's Order. The price for any special packaging shall be billed to Buyer. Buyer is responsible to timely procure all necessary export and import licenses and all permits required for the consummation of the transaction and to obtain insurance coverage on all shipments of products supplied by D&M. Risk of loss and/or damage to the products shall pass to Buyer upon delivery thereof to Buyer or its representative, or to a carrier for shipment to Buyer or its designated customer, as the case may be, at the FOB point.
(c) D&M shall not be liable for any damages, including consequential damages, caused by delays or non-performance resulting from or related to force majeure or other causes beyond D&M's reasonable control, including, but not limited to, war, blockade, civil disturbances, strikes and lockouts, labor shortages, fire and other casualties, acts of nature, accidents and governmental acts (including regulations concerning export and import licensing and currency exchange). In case of non-delivery, D&M's obligation shall be limited to the refund of any advance payment received from Buyer.
(d) All claims for loss of or damage to products, whether concealed or obvious, must be made, in writing, to the carrier and to D&M by Buyer as soon as possible after receipt of shipment, and in no case beyond 30 days of shipment, or such claims shall be deemed waived. D&M will render reasonable assistance in providing information necessary for Buyer to process such damage claims with the carrier or any insurance company.
(e) Buyer agrees to accept delivery within fifteen (15) days following the anticipated date of delivery. If Buyer refuses to take delivery within the fifteen (15) day period, D&M reserves the right to charge Buyer for storage charges plus interest.

6. RETURNS/CANCELLATION CHARGES:
Buyer shall not return products to D&M without the written consent of, and upon terms agreed to, by D&M. If Buyer refuses to accept delivery, or improperly revokes acceptance of product, Buyer shall be responsible for D&M's cancellation charges and expenses. Before any returns, a Return Merchandise Authorization ("R.M.A.") number must be obtained from D&M. Products returned without an R.M.A. number clearly marked on the outside of the shipping carton will be refused. Except for approved warranty returns, D&M will only accept for return and credit new, unused, undamaged, current stock items, in the original packaging. Buyer shall be responsible for all freight charges, import/export charges, duties, tariffs, taxes, insurance and risk of loss/damage regarding return shipment to D&M.

7. DRAWINGS/MEASUREMENTS:
All ratings, drawings, tables, graphs and the like submitted by D&M or set forth in written materials or on the company's website are approximations only. Weights, measurements, capacities and all other particulars of products or services offered by D&M are approximations only. D&M is not responsible for such approximations, including, in particular, based on data supplied by Buyer.

8. LIMITE D WARRANTY:
(a). At the time of shipment, new and unused product shall be free from defects in materials and workmanship. D&M warrants that for a period of one (1) year from the date the product is first used by Buyer, or 18 months from the date of shipment, whichever occurs first, if any product or part is found by D&M to be defective, D&M will, at its sole discretion and as Buyer's exclusive remedy, either repair, replace or return the purchase price paid to D&M; provided that the subject product is used under normal conditions for which it was designed and installed, operated and maintained in accordance with D&M's instructions and in accordance with generally accepted industrial practices. Products repaired or replaced during the warranty period shall be covered by the foregoing warranty for the remainder of the original warranty period or ninety (90) days from date of the repair or shipment of the replacement, whichever is longer. D&M warrants, for a period of ninety (90) days, that services shall be performed in a workman like manner. Buyer's sole remedy for a breach of this service warranty is limited to further service or a refund or credit of amounts paid by Buyer, at Seller's option. (b) D&M's warranty obligation shall be conditioned upon receipt by D&M of written notice of any alleged defects within sixty (60) days after discovery. D&M will not be responsible for unauthorized repairs to any products, even if defective. D&M shall not be responsible for any products which have been altered, abused, misused, or improperly installed or repaired, or for any loss, damage, defect, claim or nonperformance resulting from or attributable to Buyer's specifications. D&M does not guarantee production rates or the quality of goods made using D&M's products or services, nor shall any longer warranty periods apply, except as agreed in writing signed by an authorized D&M representative. (c) Where Buyer orders non-stock products or parts manufactured by a third-party, D&M will, to the extent permitted, pass through to Buyer any warranty of the manufacturer. As to such items, Buyer's sole remedy for breach of warranty shall be the remedy offered by and

available from the manufacturer, if any. (d) D&M'S WARRANTY HEREIN IS IN LIEU OF AND EXCLUDES ALL OTHER WARRANTIES OF D&M AND ANY PARENT OR AFFILIATED COMPANIES OF D&M. D&M DISCLAIMS ALL OTHER WARRANTIES, WHETHER EXPRESS, IMPLIED OR STATUTORY, INCLUDING, BUT NOT LIMITED TO, ANY IMPLIED WARRANTIES OF MERCHANTABILITY AND/OR FITNESS FOR A PARTICULAR PURPOSE OR USE. (e)UNDER NO CIRCUMSTANCES SHALL D&M, OR ANY PARENT OR AFFILIATED COMPANY OF D&M, BE LIABLE TO BUYER OR ANY ENTITY FOR ANY SPECIAL, INDIRECT OR CONSEQUENTIAL DAMAGES, WHETHER ARISING FROM BREACH OF CONTRACT, TORT, NEGLIGENCE, MISREPRESENTATION, STRICT LIABILITY OR OTHERWISE, INCLUDING FOR LOST PROFITS, IMPAIRMENT OF GOODS, WORK STOPPAGE OR OTHERWISE, IN ANY WAY ARISING OUT OF OR RELATED TO PRODUCTS OR SERVICES SUPPLIED BY D&M OR ANY TRANSACTION TO WHICH THESE STANDARD TERMS APPLY. THE MAXIMUM LIABILITY OF D&M, INCLUDING, BUT NOT LIMITED TO, WITH RESPECT TO THE DESIGN, MANUFACTURE, SALE, DELIVERY, RESALE, INSPECTION, ASSEMBLY, INSTALLATION, TESTING, REPAIR, REPLACEMENT, MAINTENANCE OR USE OF ANY PRODUCT OR THE PERFORMANCE OF ANY SERVICE, SHALL NOT EXCEED THE PURCHASE PRICE PAID TO D&M.

9. INFRINGEMENT:

The liability of D&M, any parent or affiliated company for patent infringement is limited to D&M's defense of proceeding brought against Buyer based on a claim that products, when employed in the manner intended by D&M, constitutes an infringement of any U.S. patent. If Buyer's use of the products in the manner intended by D&M is finally enjoined in such action, D&M shall, at its option, procure for Buyer the right to continue using the products, replace the same with non-infringing products, modify the products so that they become non-infringing equivalent products, or refund the purchase price (less allowance for use, damage or obsolescence). D&M makes no warranty against patent infringement resulting from portions of the products made to Buyer's specifications or the use of products in combination with any other goods or in the practice of any process, and if a claim is brought against D&M or any parent or affiliate of D&M, Buyer shall defend, indemnify and hold D&M (and its parent/affiliates) harmless from and against any and all claims, losses or damages arising therefrom.

10. GOVERNING LAW, FORUM AND JURY WAIVER:

These Terms and the relationship of the parties are governed by the internal laws of the State of Illinois, U.S.A., without regard to its choice of law rules. For all claims or disputes arising out of or relating to the sale of products or services by D&M and/or the relationship of the parties, Buyer shall file any and all lawsuits or claims exclusively in the state or federal courts located in Cook County, Illinois. Buyer hereby submits to the personal jurisdiction of said courts and waives any claim of improper or inconvenient venue. To the fullest extent permitted by law, Buyer hereby agrees to waive the right to trial by jury for all claims or disputes arising out of or relating to the sale of products or services by D&M and/or the relationship of Buyer and D&M. The parties agree that U.N. Convention of Contracts for the international Sale of Goods shall not apply to their relationship or the sale of products by D&M.

11. EXPORT CONTROL:

Buyer acknowledges that the products and related software and technology may be subject to export controls of the U.S. Government, including the Export Administration Regulations of the U.S. Department of Commerce. Buyer shall comply with all applicable laws, regulations, treaties and agreements regarding the use, import, export or re-export of the products and shall be solely responsible for obtaining all required licenses or approvals. The products are not intended for use in any nuclear, chemical or weapons production or environmental damage or for export, re-export, or distribution to any restricted or embargoed country or to a person or entity whose privilege to participate in exports has been denied or restricted by the U.S. Government. Buyer shall indemnify, hold harmless and defend D&M, its parent and affiliated companies from any violation of this section by Buyer or its employees, consultants, agents and customers.

12. MISCELLANEOUS:
(a) Failure on the part of D&M to enforce any of its rights derived from these Terms shall never be construed as a waiver of any of D&M's rights.
(b) The invalidity of one or more of the clauses herein shall not affect the validity of the other clauses, which for this purpose are considered severable.
(c) Any use by Buyer of any AYAI trademark must be approved by YAI in writing.
(d) Buyer may not delegate its performance or assign its rights under these Terms except upon the express written consent of D&M. In any case, these Terms shall be binding upon the successors and legal representatives of Buyer.

YASKAWA.COM



Yaskawa is the leading global manufacturer of low and medium voltage variable frequency drives, servo systems, machine controllers and industrial robots. Our standard products, as well as tailor-made solutions, are well known and have a high reputation for outstanding quality and reliability.

SL.GA800.01

YASKAWA

Yaskawa America, Inc. | Drives & Motion Division
1-800-YASKAWA | Email: info@yaskawa.com | yaskawa.com
Document No. SL.GA800.01 | 02/2025 | © 2021 Yaskawa America, Inc.