YASKAWA

DIGITAL OPERATOR
INSTRUCTIONS

HAND-HELD TYPE FOR AC SERVOPACK TYPE SGD, SGDA, SGDB, SGDE, DR2

TYPE JUSP-OP02A-1

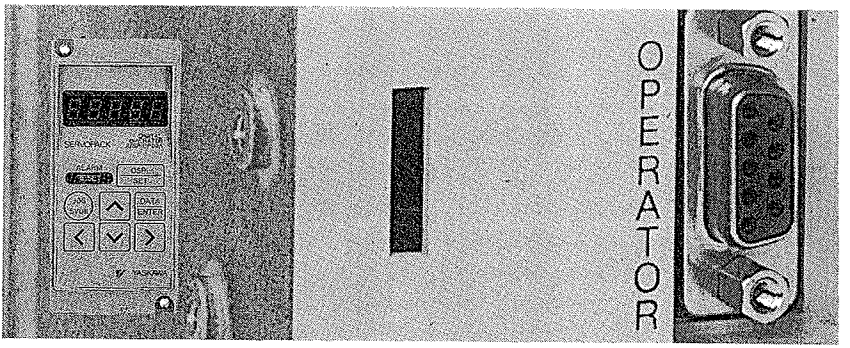

Before initial operation, read these instructions thoroughly, and retain for future reference.

YASKAWA

TOE-S800-15.3C

NOTES

(1) Factory setting of Cn-04 (speed loop gain) is determined by the follow-ing conditions :

Load inertia $\leqq$ motor inertia $\times 3$

Be sure to set the value of Cn-04 to 40 or less when motor is rotated without load. If the value has been kept at the factory setting, the motor may oscillate.

(2) The encoder has been preset to incremental encoder 2048Pulses/Rev at the factory prior to shipment. When another encoder is used, set bit E of user constants Cn-11 and Cn-01.

(3) AC SERVOPACK (type SGD, SGDA, and SGDE) has two control types ; speed control (torque control) and positioning control. Since each has different operations, make sure of your SERVOPACK type and read the section stated in Table 1.1 for each operation.

(4) AC SERVOPACK (type SGDB and DR2) has two control types, depending on user constant selection-position control and speed control (torque control). Since each has different operations, make sure of your SERVOPACK type and read the section stated in Table 1.1 for each operation.

(5) Mounted-type digital operator (type JUSP-OP03A) is also available for SERVOPACK (type SGD, SGDA, SGDB, and SGDE). For mounted-type, refer to the instruction manual (TOE-S800-15.4).
Only a hand-held type digital operator can be used with type DR2 SERVOPACK.

(6) Digital operator (type JUSP-OP02A) for SERVOPACK (type DR1) requi-res a different connecting cable.

CONTENTS

1. OUTLINE OF THIS MANUAL ····4

2. OPERATION METHOD FOR SERVOPACK SGD-□□S FOR SPEED (TORQUE) CONTROL ····5
2.1 SWITCH OPERATION ····5
2.2 DIGITAL OPERATOR FUNCTIONS ····6
2.3 STATUS INDICATION MODE ····7
2.4 SETTING MODE ····9
2.4.1 User Constant (Data) Setup and Monitor ····9
2.4.2 User Constant (Memory Switch) Setup and Monitor ····21
2.4.3 Digital Operator Jog Operation Mode Selection and Operating Procedure ····34
2.4.4 Speed Reference Offset Adjustment ····36
2.4.5 Clearing Fault Traceback Data ····37
2.4.6 Speed Reference Offset Manual Adjustment ····38
2.4.7 Check of Motor ····40
2.4.8 Auto Tuning ····42
2.4.9 Check of Software Version ····45
2.5 MONITOR MODE ····47
2.6 FAULT TRACEBACK MODE ····51

3. OPERATION METHOD FOR SERVOPACK SGD-□□P FOR POSITIONING CONTROL ····53
3.1 SWITCH OPERATION ····53
3.2 DIGITAL OPERATOR FUNCTIONS ····54
3.3 STATUS INDICATION MODE ····55
3.4 SETTING MODE ····57
3.4.1 User Constant (Data) Setup and Monitor ····57
3.4.2 User Constant (Memory Switch) Setup and Monitor ····70
3.4.3 Digital Operator Jog Operation Mode Selection and Operating Procedure ····85
3.4.4 Clearing Fault Traceback Data ····87
3.4.5 Check of Motor ····88
3.4.6 Auto Tuning ····90
3.4.7 Check of Software Version ····93
3.5 MONITOR MODE ····95
3.6 FAULT TRACEBACK MODE ····100

APPENDIX 1 SGD USER CONSTANT LIST FOR SPEED (TORQUE)CONTROL ····102
APPENDIX 2 SGD USER CONSTANT LIST FOR POSITIONING CONTROL ····104
APPENDIX 3 SGDA USER CONSTANT LIST FOR SPEED (TORQUE) CONTROL ····106
APPENDIX 4 SGDA USER CONSTANT LIST FOR POSITION CONTROL ····108
APPENDIX 5 SGDE USER CONSTANT LIST FOR SPEED (TORQUE) CONTROL ····110
APPENDIX 6 SGDE USER CONSTANT LIST FOR POSITION CONTROL ····112
APPENDIX 7 SGDB USER CONSTANT LIST FOR POSITION CONTROL / SPEED (TORQUE) CONTROL ····113
APPENDIX 8 DR2 USER CONSTANT LIST FOR SPEED (TORQUE) CONTROL ····117
APPENDIX 9 DR2 USER CONSTANT LIST FOR POSITION CONTROL ····119

1. OUTLINE OF THIS MANUAL

AC SERVOPACK (type SGD, SGDA, and SGDE) has two control types ; speed control (torque control) and positioning control. Since each has different operations, make sure of your SERVOPACK type and read the section stated in Table 1.1 for each operation.
AC SERVOPACK (type SGDB, DR2) also has two control types, speed control (Torque control) and positioning control, depending on user constant selection.

Table 1.1 Outline of This Manual

SERVOPACK type	Digital Operator	Section	Page
For Speed Control (Torque Control) SGDA-□□S□ SGDE-□□S□ SGD-□□S SGDB-□□D□ DR2-□□C□	Hand-held Type (type : JUSP-OP02A-1)	2	5 to 52
For Position Control SGDA-□□P□ SGDE-□□P SGD-□□P SGDB-□□D□ DR2-□□C□	Hand-held Type (type : JUSP-OP02A-1)	3	53 to 101

2. OPERATION METHOD OF HAND-HELD TYPE DIGITAL OPERATOR (JUSP-OP02A-1) FOR SPEED (TORQUE) CONTROL

This section explains the operation method when SERVOPACK for speed control (torque control) is operated using a hand-held type digital operator (JUSP-OP02A-1).

2.1 SWITCH OPERATION

Fig.2.1 shows the digital operator. The digital operator has various functions as listed by modes in Par.2.2, "DIGITAL OPERATOR FUNCTIONS" (p.6).

Notes:

1. The data set by the digital operator is retained in SERVOPACK even after the power is turned OFF.
2. Even if the power is turned OFF after fault occurrence, the fault data is retained in memory. Therefore, it is possible to check the fault data after the power is turned back ON.
3. The monitor mode can be changed even during operations.

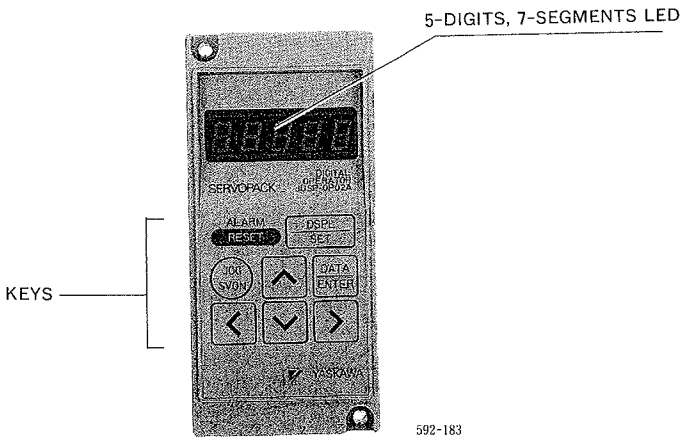

Fig. 2.1 DIGITAL OPERATOR (HAND HELD TYPE) JUSP-OP02A-1

2.2 DIGITAL OPERATOR FUNCTIONS

Table 2.1 shows the digital operator's functions. The status display is the default when control power is turned ON. To change the mode, use DSPL/SET key as shown in Fig.2.2.

Table 2.1 Digital Operator Functions

Mode	Function
Status Indication Mode	Various Status Indications • Base Block • On Operation • Fault (See Par.2.3)
Setting Mode	Refer to "User Constant Setting." (See Par.2.4.1) • Operation (JOG) from digital operator (See Par.2.4.3) • Speed Reference / Torque Reference Offset Adjustment (See Par.2.4.4) • Clearing Fault Traceback Data (See Par.2.4.5) • Check of Motor (See Par.2.4.7) • Auto Tuning (See Par.2.4.8) • Check of Software Version (See Par.2.4.9)
Monitor Mode	Various Monitoring • Speed • Speed Reference • Torque Reference • Number of Pulses from Origin (Phase-U) • Electrical Angle • Internal Status Bit (See Par.2.5)
Fault Traceback Indication Mode	Fault History (See Par.2.6)

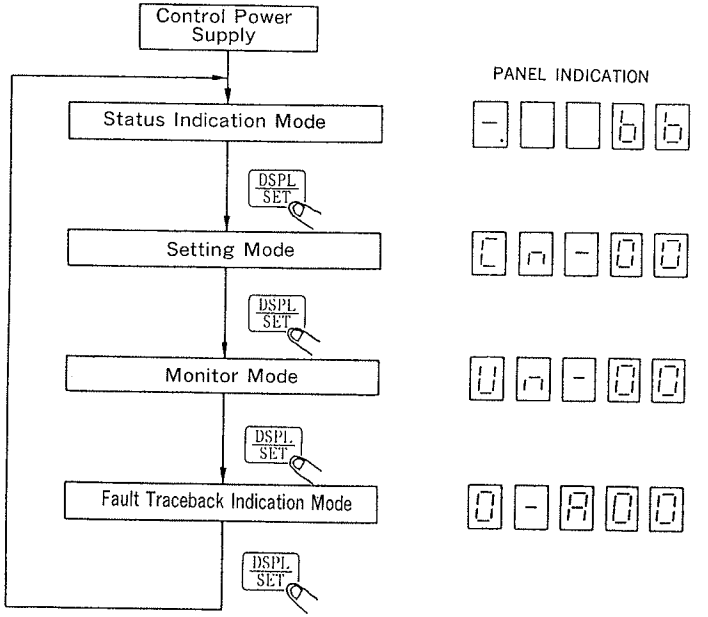

Fig. 2.2 Mode Changeover

2.3 STATUS INDICATION MODE

When this mode is selected, the condition of SERVOPACK is indicated with bits and codes as shown in Fig.2.3. Table 2.2 shows the bit data contents. Table 2.3 shows the codes and conditions.

ALARM RESET : Alarm reset switch

Panel Display

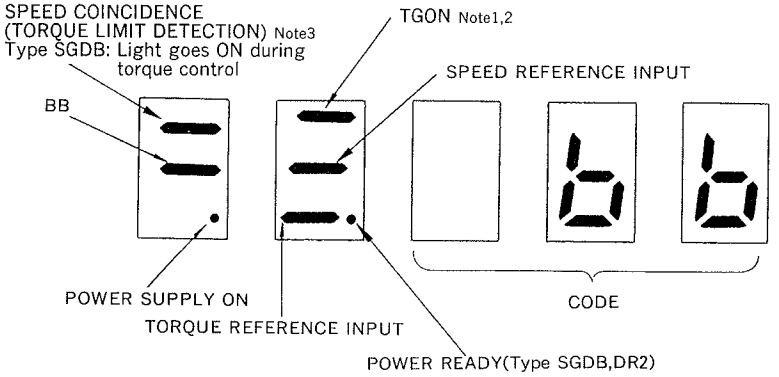

Notes :

1. TGON or current limit detection is displayed according to bit 4 of user constant Cn-01 (Type SGD, SGDA, SGDE). TGON is displayed at type DR2.
2. TGON or brake interlock signal is displayed according to bit E of user constant Cn-01 (Type DR2).
3. Torque limit detection or speed agreed can be selected according to bit 4 of user constant Cn-01 (Type DR2).

Table 2.3 Status Indication Mode

2.3 STATUS INDICATION MODE (Cont'd)

Table 2.2 Bit Data Contents

Bit Data	Contents	Remarks
Power Supply ON	Light goes ON with power supply ON. Light goes OFF with power supply OFF.	Type SGDA, SGDE, SGD
	Light goes ON with control power supply ON. Light goes OFF with control power supply OFF.	Type SGDB
BB	Light goes ON with base block, and goes OFF with servo ON.	
Speed Agreed	Light goes ON when motor rotating speed reaches internal speed reference set by a speed reference or parameter.	
Torque Limit Detection	Light goes ON when internal torque reference is higher than torque limit detection level.	Type DR2 : Selected by bit 4 of user constant Cn-01
TGON	Light goes ON with motor rotating speed higher than TGON level.	Type SGD, SGDA, SGDE : Selected by bit 4 of user constant Cn-01. Type SGDB : TGON
Torque Limit Detection	Light goes ON when torque reference reaches the torque limit value.	
TGON	Light goes ON with motor rotating speed higher than TGON level.	Type DR2 : Selected by bit E of user constant Cn-01.
Brake Interlock Signal	Light goes ON when brake is released at brake interlock ON.	
Speed Reference Input	Light goes ON with speed reference input equal to or higher than TGON level.	
Torque Reference Input	Light goes ON with torque reference input less than 10% of rated torque.	Only at torque control
Power Ready (Main Circuit Power Supply ON)	Light goes ON when main circuit power supply is normal.	Type SGDB, DR2

Table 2.3 Codes and Status

Code	Status
bb	Base Block
run	On Operation
Pot	Forward Running Prohibited
not	Reverse Running Prohibited
A.00 ↕	Ararm Status Refer to Table 2.9.

2.4 SETTING MODE

In this mode, the following operations can be performed.

- ●User constant setup and monitor
- ●Jog operations from the digital operator
- ●Offset adjustment
- ●Fault traceback data clearing
- ●Check of motor
- ●Auto tuning
- ●Check of software version

2.4.1 User Constant (Data) Setup and Monitor (Cn-03 to Cn-23)

Panel Display

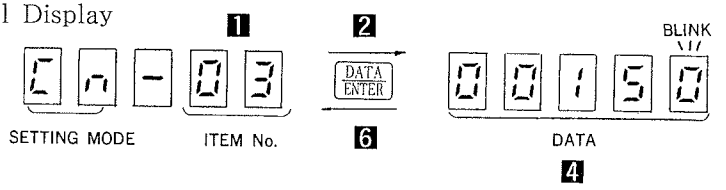

Fig. 2.4 User Constant Setting

1 Set up the item number with the (∧) , (∨) , (<) ,or (>) key.
- ●With the (<) or (>) key, choose a setup digit. The chosen digit starts blinking to indicate that its numerical value can be changed.
- ●With the (∧) or (∨) key, increase or decrease the numerical value until the desired value is obtained.

2 With the DATA/ENTER key, display the data related to the selected item number.

3 With the (∧) , (∨) , (<) , or (>) key, set up the data. (The same operation as stated in **1** .)

4 Retain the data with the DSPL/SET key.

5 With the DATA/ENTER key, return to the item No. display status.

6 Repeat steps **1** through **5** as needed.

7 Using the DSPL/SET key, switch from the setting mode to the monitor mode.

2.4.1 User Constant (Data) Setup and Monitor (Con't d)

Table 2.4, 2.5, 2.6, 2.7, and 2.8 show user constants (Constant Setting)

Table 2.4 Type SGD User Constants List

	User Constant	Symbol	Name	Unit	Lower Limit	Upper Limit	Setting Prior to Shipment	Remarks
Gain Constants	Cn-03	VREFGN	Speed Reference Gain	(r/min)/V	0	2162	500	
	Cn-04	LOOPHZ	Speed Loop Gain	Hz	1	2000	80	Note1
	Cn-05	PITIME	Speed Loop Integration Time	ms	2	10000	20	
	Cn-1A	POSGN	Position Loop Gain	1/s	1	500	40	Note3
Torque Constants	Cn-06	EMGTRQ	Emergency Stop Torque	%	0	Max Torque	Max Torque	
	Cn-08	TLMTF	Forward Running Torque Limit	%	0	Max Torque	Max Torque	
	Cn-09	TLMTR	Reverse Running Torque Limit	%	0	Max Torque	Max Torque	
	Cn-13	TCRFGN	Torque Reference Gain	$\frac{1}{10}$V/Rated Torque	10	100	30	
	Cn-14	TCRLMT	Speed Limit with Torque Control I	r/min	0	Max Speed	Max Speed	
	Cn-17	TRQFIL	Torque Reference Filter Time	100μs	0	250	4	
	Cn-18	CLMIF	Forward External Current Limit	%	0	Max Torque	100	
	Cn-19	CLMIR	Reverse External Current Limit	%	0	Max Torque	100	
Sequence Constants	Cn-07	SFSACC	Start Time (Acceleration)	ms	0	10000	0	Note4
	Cn-23	SFSDEC	Soft Start Time (Deceleration)	ms	0	10000	0	Note4
	Cn-0B	TGONLV	Zero-speed Level	r/min	1	Max Speed	20	
	Cn-0F	ZCLVL	Zero-clamp Level	r/min	0	Max Speed	10	
	Cn-22	VCMPLV	Speed Coincidence Signal Output Width	r/min	0	100	10	
	Cn-12	BRKTIM	Delay Time from Braking Reference to SVOFF	10 ms	0	50	0	

100% = rated torque

Notes:

1. Factory setting of Cn-04 (speed loop gain) is determined by the following conditions:
   Load inertia $\leqq$ motor inertia $\times$ 3
   Be sure to set the value of Cn-04 to 40 or less when motor is rotated without load. If the value has been kept at the factory setting, the motor may oscillate.
2. After modifying Cn-0A (PG division ratio setting), and Cn-11 (number of encoder pulses setting), turn OFF power and start up again. The modified value takes effect only after restarting.
3. Cn-1A (position loop gain) is required when zero-clamp function is used.
4. When soft start function is used, both Cn-07 and Cn-23 should be set.

Table 2.4 Type SGD User Constants List(Cont'd)

	User Constant	Symbol	Name	Unit	Lower Limit	Upper Limit	Setting Prior to Shipment	Remarks
Sequence Constants	Cn-15	BRKSPD	Brake Timing at Motor Rotation (Speed level at which brake reference is output.)	r/min	0	Max Speed	100	
	Cn-16	BRKWAI	Brake Timing at Motor Rotation (Waiting time from SVOFF to brake reference output.)	10 ms	10	100	50	
Encoder Pulse Constants	Cn-0A	PGRAT	PG Dividing Ratio	P/R	16	32768	2048	Note2
	Cn-11	PULSNO	Number of Encoder Pulses	P/R	513	32768	2048	Note2
Other Constants	Cn-0C	TRQMSW	Mode Switch (Torque Reference)	%	0	Max Torque	200	
	Cn-0D	REFMSW	Mode Switch (Speed Reference)	r/min	0	Max Speed	0	
	Cn-0E	ACCMSW	Mode Switch (Motor Acceleration/ Detection)	10(r/min)/s	0	3000	0	
	Cn-10	JOGSPD	JOG Speed	r/min	0	Max Speed	100	
	Cn-1F	SPEED1	1st Speed	r/min	0	Max Speed	100	
	Cn-20	SPEED2	2nd Speed	r/min	0	Max Speed	200	
	Cn-21	SPEED3	3rd Speed	r/min	0	Max Speed	300	

Notes:

1. Factory setting of Cn-04 (speed loop gain) is determined by the following conditions :
   Load inertia ≦ motor inertia ×3
   Be sure to set the value of Cn-04 to 40 or less when motor is rotated without load. If the value has been kept at the factory setting, the motor may oscillate.

2. After modifying Cn-0A (PG division ratio setting), and Cn-11 (number of encoder pulses setting), turn OFF power and start up again. The modified value takes effect only after restarting.

3. Cn-1A (position loop gain) is required when zero-clamp function is used.

4. When soft start function is used, both Cn-07 and Cn-23 should be set.

Table 2.5 Type SGDA User Constants List

	User constant	Symbol	Name	Unit	Lower Limit	Upper Limit	Setting Prior to Shipping	Remarks
Gain Constants	Cn-03	VREFGN	Speed Reference Gain	(r/min)/V	0	2162	500	
	Cn-04	LOOPHZ	Speed Loop Gain	Hz	1	2000	80	Note 2
	Cn-05	PITIME	Speed Loop Integration Time Constant	ms	2	10000	20	Note 2
	Cn-1A	POSGN	Position Loop Gain	1/S	1	500	40	Note 2 Note 3
Torque Constants	Cn-13	TCRFGN	Torque Reference Gain	$\frac{1}{10}$V/Rating	10	100	30	
	Cn-06	EMGTRQ	Emergency Stop Torque	%	0	Max. Torque	Max. Torque	OT Made
	Cn-08	TLMTF	Forward Running Torque Limit	%	0	Max. Torque	Max. Torque	
	Cn-09	TLMTR	Reverse Running Torque Limit	%	0	Max. Torque	Max. Torque	
	Cn-14	TCRLMT	Speed Limit with Speed Control 1	r/min	0	Max. Speed	Max. Speed	
	Cn-17	TRQFIL	Torque Reference Filter Time Constant	100μ s	0	250	4	
	Cn-18	CLMIF	Forward External Current Limit	%	0	Max. Torque	100	
	Cn-19	CLMIR	Reverse External Current Limit	%	0	Max. Torque	100	
Sequence Constants	Cn-07	SFSACC	Soft Start Time (Accel)	ms	0	10000	0	Note 4
	Cn-23	SFSDEC	Soft Start Time (Decel)	ms	0	10000	0	Note 4
	Cn-0B	TGONLV	Zero-speed Level	r/min	1	Max. Speed	20	
	Cn-0F	ZCLVL	Zero-clamp Level	r/min	0	Max. Speed	10	
	Cn-12	BRKTIM	Delay Time from Braking Command to SVOFF	10ms	0	50	0	
	Cn-15	BRKSPD	Brake Timing at Motor Rotation (speed level at which brake command is output.)	r/min	0	Max. Speed	100	
	Cn-16	BRKWAI	Brake Timing at Motor Rotation (waiting time from SVOFF to brake command output.)	10ms	10	100	50	
	Cn-22	VCMPLV	Speed Agreed Signal Output Width	r/min	0	100	10	
Encoder Pulse Constants	Cn-0A	PGRAT	PG Division Ratio	pulses / rev	16	32768	2048	Note 1
	Cn-11	PULSNO	Number of Encoder Pulses	pulses / rev	513	32768	2048	Note 1

Table 2.5 Type SGDA User Constants List (Cont'd)

	User constant	Symbol	Name	Unit	Lower Limit	Upper Limit	Setting Prior to Shipping	Remarks
Other Constants	Cn-0C	TRQMSW	Mode Switch (Torque Reference)	%	0	Max. Torque	200	
	Cn-0D	REFMSW	Mode Switch (Speed Reference)	r/min	0	Max. Speed	0	
	Cn-0E	ACCMSW	Mode Switch (Motor Acceleration Detection)	10(r/min)/s	0	3000	0	
	Cn-10	JOGSPD	JOG Speed	r/min	0	Max. Speed	500	
	Cn-1F	SPEED1	Internal Setting Speed Selection (1st Speed)	r/min	0	Max. Speed	100	
	Cn-20	SPEED2	Internal Setting Speed Selection (2nd Speed)	r/min	0	Max. Speed	200	
	Cn-21	SPEED3	Internal Setting Speed Selection (3rd Speed)	r/min	0	Max. Speed	300	
	Cn-28	NFBCC	Speed Loop Compensation Constants	—	0	100		
	Cn-29	AXISNO	Axis Address	—	0	14		

▨ : User constants that must be set.

Notes :
1. After changing the setting, always turn the power OFF, then ON. This makes the new setting valid.
2. Automatically set by auto tuning function.
3. Valid only when zero-clamp function is used.
4. To use soft start function, always set both Cn-07 and Cn-23.

Table 2.6 Type SGDE User Constants List

User constant	Symbol	Name	Unit	Lower Limit	Upper Limit	Setting Prior to Shipping	Remarks
Cn-03	VRFGN	Speed Reference Gain	(r/min)/V	0	2162	500	
Cn-04	LOOPHZ	Speed Loop Gain	Hz	1	2000	80	Note 2
Cn-05	PITIME	Speed Loop Integration Time Constant	ms	2	10000	20	Note 2
Cn-07	SFSACC	Soft Start Time (Accel)	ms	0	10000	0	
Cn-08	TLMTF	Forward Running Torque Limit	%	0	Max. Torque	Max. Torque	
Cn-09	TLMTR	Reverse Running Torque Limit	%	0	Max. Torque	Max. Torque	
Cn-0A	PGRAT	PG Division Ratio	P/R	16	32769	1024	Note 1
Cn-0B	TGONLV	Zero-speed Level	r/min	1	Max. Speed	20	
Cn-0C	TRQMSW	Mode Switch (Torque Reference)	%	0	Max. Torque	200	
Cn-0F	ZCLVL	Zero-clamp Level	r/min	0	16383	10	
Cn-12	BRKTIM	Delay Time from Braking Reference to SVOFF	10ms	0	50	0	
Cn-13	TCRFGN	Torque Reference Gain	0.1V/Rating	10	100	30	
Cn-14	TCRLMT	Speed Control with Torque Control 1	r/min	0	Max. Speed	Max. Speed	
Cn-17	TRQFIL	Torque Reference Filter Time Constant	100μ s	0	250	4	
Cn-18	CLMIF	Forward External Torque Limit	%	0	Max. Torque	100	
Cn-19	CLMIR	Reverse External Torque Limit	%	0	Max. Torque	100	
Cn-1A	POSGN	Position Loop Gain	1/s	1	500	40	Note 3
Cn-1F	SPEED1	Internal Setting Speed (1st Speed)	r/min	0	Max. Speed	100	
Cn-20	SPEED2	Internal Setting Speed (2nd Speed)	r/min	0	Max. Speed	200	
Cn-21	SPEED3	Internal Setting Speed (3rd Speed)	r/min	0	Max. Speed	300	
Cn-23	SFSDEC	Soft Start Time (Decel)	ms	0	10000	0	

Notes :
1. After changing the setting, always turn the power OFF, then ON. This makes the new setting valid.
2. Automatically set by auto tuning function.
3. Valid only when zero-clamp function is used.

Table 2.7 Type SGDB User Constants List

Category	User Constant No.	Code	Name	Unit	Lower Limit	Upper Limit	Factory Setting	Remarks
Basic Constants	Cn-11	PULSNO	Number of encoder pulses	P/R	513	32768	*1	Note 1
	Cn-2B	CTLSEL	Control method selection	*1	0	11	0	Note 1
	Cn-2A	MTRSEL	Motor selection	*1	0	254	*1	Note 1
Gain Related Constants	Cn-03	VREFGN	Speed reference adjustment gain	(r/min)/V	10	2000	*1	
	Cn-04	LOOPHZ	Speed loop gain	Hz	1	2000	80	Note 2
	Cn-05	PITIME	Speed loop integration time constant	0.01ms	200	51200	2000	Note 2
	Cn-1A	POSGN	Position loop gain	1/s	1	1000	40	Note 2
	Cn-1C	BIASLV	Bias	r/min	0	450	0	
	Cn-1D	FFGN	Feed-forward	%	0	100	0	
	Cn-17	TRQFIL	Torque reference filter time constant	0.1ms	0	250	*2	
	Cn-28	NFBCC	Speed loop compensation constant	—	0	100	0	
	Cn-0C	TRQMSW	Mode switch torque reference	%	0	800	200	
	Cn-0D	REFMSW	Mode switch speed reference	r/min	0	10000	0	
	Cn-0E	ACCMSW	Mode switch acceleration	10r/min/s	0	3000	0	
	Cn-0F	ERPMSW	Mode switch error pulse	reference unit	0	10000	0	
Reference related Constants	Cn-0A	PGRAT	PG dividing ratio	P/R	16	32768	*1	
	Cn-24	RATB	Electronic gear ratio (numerator)	—	1	65535	4	Note 1
	Cn-25	RATA	Electronic gear ratio (denominator)	—	1	65535	1	Note 1
	Cn-07	SFSACC	Soft start acceleration time	ms	0	10000	0	Note 3
	Cn-23	SFSDEC	Soft start deceleration time	ms	0	10000	0	Note 3
	Cn-26	ACCTME	Position reference acceleration/deceleration constant	0.1ms	0	640	0	
	Cn-27	FFFILT	Feed-forward filter	0.1ms	0	640	0	
Torque Related Constants	Cn-08	TLMTF	Forward rotation torque limit	%	0	800	800	
	Cn-09	TLMTR	Reverse rotation torque limit	%	0	800	800	
	Cn-18	CLMIF	Forward external current limit	%	0	800	100	
	Cn-19	CLMIR	Reverse external current limit	%	0	800	100	

*1 Refer to page 18.
*2 6.0kw or less : 4, 7.5kw : 8, 11.0 to 15.0kw : 16.

Table 2.7 Type SGDB User Constants List (Cont'd)

Category	User Constant No.	Code	Name	Unit	Lower Limit	Upper Limit	Factory Setting	Remarks
Torque Related Constants	Cn-06	EMGTRQ	Emergency stop torque	%	0	800	800	
	Cn-13	TCRFGN	Torque reference gain	0.1V/100%	10	100	30	
	Cn-14	TCRLMT	Speed limit for torque control	r/min	0	10000	10000	
Sequence Related Constants	Cn-2D	OUTSEL	Output signal selection	*3	110	666	210	
	Cn-0B	TGONLV	Zero-speed level	r/min	1	10000	20	
	Cn-29	ZCLVL	Zero clamp level	r/min	0	10000	10	
	Cn-22	VCMPLV	Speed coincidence signal output range	r/min	0	100	10	
	Cn-1B	COINLV	Positioning completion range	reference unit	0	250	7	
	Cn-1E	OVERLV	Overflow	256reference unit	1	32767	1024	
	Cn-12	BRKTIM	Time delay from brake reference until servo OFF	10ms	0	50	0	
	Cn-15	BRKSPD	Speed level for brake reference output during motor operation	r/min	0	10000	100	
	Cn-16	BRKWAI	Output timing of brake reference during motor operation	10ms	10	100	50	
Other Constants	Cn-10	JOGSPD	Jog speed	r/min	0	10000	500	
	Cn-1F	SPEED1	1st speed (contact input speed control)	r/min	0	10000	100	
	Cn-20	SPEED2	2nd speed (contact input speed control)	r/min	0	10000	200	
	Cn-21	SPEED3	3rd speed (contact input speed control)	r/min	0	10000	300	
	Cn-2C	PGPWR	PG power supply voltage change	0.1mV	52000	58000	52500	

*3 Refer to the next page.

▒▒ : User constants that must be set.

Notes :
1. After changing the setting, always turn the power OFF, then ON. This makes the new setting valid.
2. Automatically set by auto tuning function.
3. To use soft start function, always set both Cn-07 and Cn-23.
4. Refer to the next page.

Note 4 : Control method selection (Cn-2B) setting values

Setting value	Control method
0	Speed control (analog reference)
1	Position control (pulse train reference)
2	Torque control (analog reference)
3	Speed control (contact reference) ↔ Speed control (0 reference)
4	Speed control (contact reference) ↔ Speed control (analog reference)
5	Speed control (contact reference) ↔ Position control (pulse train reference)
6	Speed control (contact reference) ↔ Torque control (analog reference)
7	Position control (pulse train reference)↔ Speed control (analog reference)
8	Position control (pulse train reference)↔ Torque control (analog reference)
9	Torque control (analog reference) ↔ Speed control (analog reference)
10	Speed control (analog reference) ↔ Zero clamp control
11	Position control (pulse train reference)↔ Position control (inhibit)

- Outputs signal selection (CN-2D) setting values
  Selects which function of signal sent to output signal of 1CN.

1st decimal digit	to select function of CN-25, 26 ($\overline{\text{COIN}}$/$\overline{\text{V-CMP}}$)
2nd decimal digit	to select function of CN-27, 28 ($\overline{\text{TGON}}$)
3rd decimal digit	to select function of CN-29, 30 ($\overline{\text{S-RDY}}$)

Setting value	Function
0	$\overline{\text{COIN}}$/$\overline{\text{V-CMP}}$ (only assigned to 1CN-25, 26)
1	$\overline{\text{TGON}}$
2	$\overline{\text{S-RDY}}$
3	$\overline{\text{CLT}}$
4	$\overline{\text{BK}}$
5	OL warning
6	OL alarm

• Setting prior to shipping

SERVOPACK Type	Motor Type	Cn-2A	Cn-11 Cn-0A	Cn-03
SGDB-05ADG	SGMG-05A＊A	142	8192	250
SGDB-10ADG	SGMG-09A＊A	143		
SGDB-15ADG	SGMG-13A＊A	144		
SGDB-20ADG	SGMG-20A＊A	145		
SGDB-30ADG	SGMG-30A＊A	146		
SGDB-44ADG	SGMG-44A＊A	147		
SGDB-60ADG	SGMG-55A＊A	148		
SGDB-75ADG	SGMG-75A＊A	149		
SGDB-1AADG	SGMG-1AA＊A	140		
SGDB-1EADG	SGMG-1EA＊A	150		
SGDB-03ADM	SGMG-03A＊B	171	8192	167
SGDB-07ADM	SGMG-06A＊B	172		
SGDB-10ADM	SGMG-09A＊B	173		
SGDB-15ADM	SGMG-12A＊B	174		
SGDB-20ADM	SGMG-20A＊B	175		
SGDB-30ADM	SGMG-30A＊B	176		
SGDB-44ADM	SGMG-44A＊B	177		
SGDB-60ADM	SGMG-60A＊B	178		
SGDB-10ADS	SGMS-10A＊A	163	4096	500
SGDB-15ADS	SGMS-15A＊A	164		
SGDB-20ADS	SGMS-20A＊A	165		
SGDB-30ADS	SGMS-30A＊A	166		
SGDB-44ADS	SGMS-40A＊A	167		
SGDB-50ADS	SGMS-50A＊A	168		
SGDB-30ADD	SGMD-22A＊A	155	1024	333
SGDB-44ADD	SGMD-32A＊A	156		
SGDB-50ADD	SGMD-40A＊A	157		
SGDB-05AD	SGM-04A	106	2048	500
SGDB-10AD	SGM-08A	107		
SGDB-05ADP	SGMP-04A	126		
SGDB-10ADP	SGMP-08A	127		
SGDB-15ADP	SGMP-15A	128		

Table 2.8 Type DR2 User Constants List

Category	User Constant No.	Code	Name	Unit	Lower Limit	Upper Limit	Factory Setting	Remarks
Gain Related Constants	Cn-03	VREFGN	Speed reference gain	(r/min)/V	10	2162	500	
	Cn-04	LOOPHZ	Speed loop gain	Hz	1	2000	80	See note 2
	Cn-05	PITIME	Speed loop integration time constant	0.01ms	2	10000	2000	See note 2
	Cn-1A	POSGN	Position loop gain	1/s	1	500	40	See note 2 and 3
Torque Related Constants	Cn-13	TCRFGN	Torque reference gain	(0.1 V/rated torque)	10	100	30	
	Cn-06	EMGTRQ	Emergency stop torque	%	0	Max. torque	Max. torque	
	Cn-08	TLMTF	Forward rotation torque limit	%	0	Max. torque	Max. torque	
	Cn-09	TLMTR	Reverse rotation torque limit	%	0	Max. torque	Max. torque	
	Cn-14	TCRLMT	Speed limit for torque control	r/min	0	4500	4500	
	Cn-17	TRQFIL	Torque reference filter time constant	100 μs	0	250	4	
	Cn-18	CLMIF	Forward external torque limit	%	0	Max. torque	100	
	Cn-19	CLMIR	Reverse external torque limit	%	0	Max. torque	100	
Sequence Related Constants	Cn-07	SFSACC	Soft start time (acceleration)	ms	0	10000	0	See note 4
	Cn-23	SFSDEC	Soft start time (deceleration)	ms	0	10000	0	See note 4
	Cn-0B	TGONLV	Zero-speed level	r/min	1	4500	20	
	Cn-12	BRKTIM	Time delay from brake reference until servo OFF	10 ms	0	50	0	
	Cn-15	BRKSPD	Speed level for brake reference output during motor operation	r/min	0	4500	100	

Table 2.8 Type DR2 User Constants List (Cont'd)

Category	User Constant No.	Code	Name	Unit	Lower Limit	Upper Limit	Factory Setting	Remarks
Sequence Related Constants	Cn-16	BRKWAI	Output timing of brake reference during motor operation	10 ms	10	100	50	
	Cn-22	VCMPLV	Speed coincidence signal output range	r/min	0	100	10	
	Cn-29	ZCLVL	Zero-clamp level	r/min	0	4500	10	
Pulse Related Constants	Cn-0A	PGRAT	Dividing ratio setting	P/R	16	32768	2048	See note 1
	Cn-11	PULSNO	Number of encoder pulses	P/R	513	32768	2048	See note 1
Other Constants	Cn-0C	TRQMSW	Mode switch (torque reference)	%	0	800	200	
	Cn-0D	REFMSW	Mode switch (speed reference)	r/min	0	4500	0	
	Cn-0E	ACCMSW	Mode switch (acceleration reference)	10 (r/min)/s	0	3000	0	
	Cn-10	JOGSPD	Jog speed	r/min	0	4500	500	
	Cn-1F	SPEED1	1st speed (contact input speed control)	r/min	0	4500	100	
	Cn-20	SPEED2	2nd speed (contact input speed control)	r/min	0	4500	200	
	Cn-21	SPEED3	3rd speed (contact input speed control)	r/min	0	4500	300	
	Cn-28	NFBCC	Speed loop compensation contact	···	0	100	0	

▒▒ : User constants that must be always set

Notes :
1) After changing the setting, always turn the power OFF, then ON. This makes the new setting valid.
2) Automatically set by autotuning function.
3) Valid only when zero-clamp function is used.
4) To use soft start function, always set both Cn-07 and Cn-23.

2.4.2 User Constant (Memory Switch) Setup and monitor (Cn-01 to Cn-02)

Memory switches Cn-01 and Cn-02 can be set up or monitored as memory switch bits. The procedures for item number setup and data display are the same as indicated in Par.2.4.1 **1** and **2**.

Panel Display

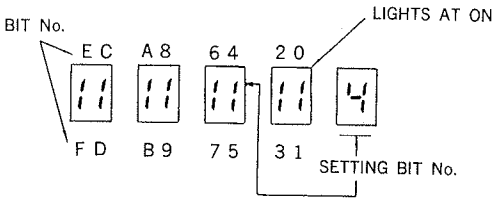

Fig. 2.5 Bit Data Display

1 With the (<) or (>) key, enter the setup memory switch bit No. at the far right end of the panel.

2 With the (∧) key, set the memory switch to ON or OFF (either (∧) or (∨) can be used). The panel indication comes on when the switch is ON, and goes off when the switch is OFF.

3 Repeat steps **1** and **2** as needed.

4 Retain the data with the DSPL/SET key.

5 With the DATA/ENTER key, return to the item No. display status.

6 Using the DSPL/SET key, switch from the setting mode to the monitor mode.

Table 2.9, 2.11, 2.13, 2.15, 2.17 show memory switches of user constant Cn-01, and Table 2.10, 2.12, 2.14, 2.16 and 2.18 those of user constant Cn-02.

Note: When the setting of user constants Cn-01 and Cn-02 are changed, turn OFF the power supply once and restart the operation.

Table 2.9 Type SGD User Constant Cn-01 (Memory Switch) List

Selection	Bit No.	Setting	Conditions	Standard
Sequence Input Selection	0	0	Servo ON / OFF by external input (SV-ON).	0
		1	The servo is ON at all times.	
	1 (ABSO. PG only)	0	The external input (SEN) is used.	0
		1	Regardless of the SEN signal presence, SGD SERVOPACK automatically concludes that the "H" level prevails.	
	2	0	The P-OT signal prohibits forward running.	0
		1	Forward running is permitted at all times.	
	3	0	The N-OT signal permits reverse running.	0
		1	Reverse running is permitted at all times.	
Sequence Output Signal Changeover (TGON)	4	0	$\overline{\text{TGON}}$ signal is used as a signal output when rotating is detected. ($\overline{\text{TGON}}$)	0
		1	$\overline{\text{TGON}}$ signal is used as a signal when current limit is detected.	
Treatment of Momentary Power Loss Reset	5	0	Maintains the servo alarm status at momentary power loss reset.	0
		1	Clears the servo alarm status automatically at momentary power loss reset.	
Fault Stop Selection	6	0	<DB stop> The dynamic brake stops the motor.	0
		1	<Coasting to a stop> The motor is freed and brought to a stop.	
	7	0	<DB OFF after DB stop> The dynamic brake is turned OFF after the motor is stopped.	1
		1	<DB continuously ON after DB stop> The dynamic brake remains activated after the motor is stopped.	
	Note 1 8	0	The overtravel status stop method coincides with bit 6.	0
		1	<Overtravel zero speed stop> In the overtravel status, the motor is stopped at the torque setting defined by user constant Cn-06.	
	Note 2 9	0	In the overtravel status, base blocking (BB) is implemented after the motor stops.	0
		1	In the overtravel status, zero clamping is effected after the motor stops.	
Mode Switch Selection	Note 3 D・C	0・0	<Torque reference> Based on the torque reference level defined by user constant Cn-0C.	0
		0・1	<Speed reference> Based on the speed reference level defined by user constant Cn-0D.	
		1・0	<Acceleration> Based on the acceleration level defined by user constant Cn-0E.	
		1・1	<None> The mode switch function is not provided.	
Encoder Selection	E	0	Incremental encoder	0
		1	Absolute encoder	
	F	—	Don't change.	0

Notes :
1. The fault stop method in the torque control mode complies with bit 6
2. Selects the status based on the stop method selected for the overtravel status (bit 8).
3. Selects the mode switch operating condition. When the mode switch operates, the speed control mode changes from P・I control to P control. (Effective only for speed control)
4. When the setting of user constant Cn-01 is changed, turn OFF the power supply and restart the operation.

Table 2.9 Type SGD User Constant Cn-01 (Memory Switch) List (Cont'd)

Selection	Bit No.	Setting	Description	Reference Input	Sequence Signal Input	Standard
Control Mode Selection	B • A	0 • 0	<Speed control> • Regular speed control • The $\overline{\text{P-CON}}$ signal (1CN-15) is used to effect P/PI control changeover	Speed reference (V-REF)	$\overline{\text{P-CON}}$ OFF: PI control ON : P control	0 • 0
		0 • 1	<Zero clamp speed control> • After the motor is stopped (ZCLVL), the speed reference is disconnected to execute the zero speed stop function. After this, it maintains the servo lock status. • The $\overline{\text{P-CON}}$ signal (1CN-15) is used to turn the zero clamp function ON and OFF.		$\overline{\text{P-CON}}$ OFF: Zero clamp function OFF ON : Zero clamp function ON	
		1 • 0	<Torque control I> • The motor output torque is controlled by the torque reference (T-REF). • The V-REF cannot be used.	Torque reference (T-REF)	None	
		1 • 1	<Torque control II> • The $\overline{\text{P-CON}}$ signal (1CN-15) is used for torque / speed control mode changeover. Torque control mode • The motor output torque is controlled by the torque reference (T-REF). • The speed limit can be entered from outside (V-REF). The V-REF voltage (+) limits both the forward and reverse running speeds. 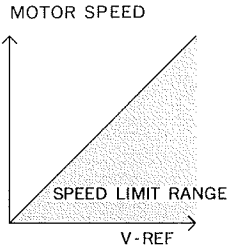 Speed control mode • The speed reference is entered from the V-REF. • The T-REF cannot be used.	At torque control, Torque reference : T-REF Speed reference : V-REF At speed control, Speed reference : V-REF Notes : • If speed goes beyond the limit negative feedback of torque in proportion to speed difference from limit speed occurs to restore moderate speed. Therefore. width of actual motor rotation speed limit depends on load conditions. • In case of continuous regeneration tension control Please contact your local YASKAWA representative.	$\overline{\text{P-CON}}$ OFF: Torque control ON : Speed control	

2.4.2 User Constant (Memory Switch) Setup and Monitor (Cn-01 to Cn-02) (Cont'd)

Table 2.10 User Constant Cn-02 (Memory Switch) List

Selection	Bit No.	Setting	Description	Standard
Reverse Rotation Mode	Note 0	0	CCW:Forward Running	0
		1	CW:Forward Running	
Home Position Error Mask	1 (ABSO. PG only)	0	Home position error is detected.	0
		1	Home position error is not detected.	
Contact Reference Mode	2	0	Contact inputs P-CL and N-CL are used as power supply limit ON / OFF reference inputs. Contact input $\overline{\text{P-CON}}$ is used as a signal specified in bit A or B of user constant Cn-01.	0
		1	Contact inputs P-CL and N-CL are used as speed input reference selection (1st to 3rd speed) signals.	

Note: Turn OFF the power supply once after setting.

Table 2.11 Type SGDA User Constant Cn-01 (Memory Switch)

Selection	Bit No.	Setting	Conditions	Standard
Sequence Input Selection	0	0	Servo ON / OFF by external input (SV-ON).	0
		1	The servo is ON at all times.	
	1 (ABSO. PG only)	0	The external input (SEN) is used.	0
		1	Regardless of the SEN signal presence, the SERVOPACK automatically conculdes that the "H" level prevails.	
	2	0	The P-OT signal prohibits forward running.	0
		1	Forward running is permitted at all times.	
	3	0	The N-OT signal permits reverse running.	0
		1	Reverse running is permitted at all times.	
Sequence Output Signal Changeover (TGON)	4	0	$\overline{\text{TGON}}$ signal is used as a signal output when rotating is detected. ($\overline{\text{TGON}}$)	0
		1	$\overline{\text{TGON}}$ signal is used as a signal when current limit is detected.	
Treatment of Momentary Power Loss Reset	5	0	Maintains the servo alarm status at momentary power loss reset.	0
		1	Releases the servo alarm status automatically at momentary power loss reset.	
Abnormal Stop Selection	6	0	<DB stop> The dynamic brake stops the motor.	0
		1	<Coasting to a stop> The motor is freed and brought to a stop.	
	7	0	<DB OFF after DB stop> The dynamic brake is turned OFF after the motor is stopped.	1
		1	<DB continuously ON after DB stop> The dynamic brake remains activated after the motor is stopped.	
	Note 1 8	0	The overtravel state stop method agrees with bit 6.	0
		1	<Overtravel zero speed stop> In the overtravel state, the motor is stopped at the torque setting defined by user constant Cn-06.	
	Note 2 9	0	In the overtravel state, base blocking (BB) is implemented after zero speed stop.	0
		1	In the overtravel state, zero clamping is effected after zero speed stop.	
Mode Switch Selection	Note 3 D • C	0 • 0	<Torque reference> Based on the torque reference level defined by user constant Cn-0C.	0
		0 • 1	<Speed reference> Based on the speed reference level defined by user constant Cn-0D.	
		1 • 0	<Acceleration> Based on the acceleration level defined by user constant Cn-0E.	
		1 • 1	<None> The mode switch function is not provided.	
Encoder Selection	E	0	Incremental encoder	0
		1	Absolute encoder	
Torque Feed-Forward Function	F	0	Torque feed-forward function is not provided.	0
		1	Torque feed-forward function is provided.	

2.4.2 User Constant (Memory Switch) and Monitor (Cn-01 to Cn-02) (Cont'd)

Table 2.11 Type SGDA User Constant Cn-01 (Memory Switch)

Selection	Bit No.	Setting	Description	Reference Input	Sequence Signal Input	Standard
Control Mode Selection	B • A	0 • 0	<Speed control> • Regular speed control • The $\overline{\text{P-CON}}$ signal (1CN-15) is used to effect P/PI control changeover	Speed reference (V-REF)	$\overline{\text{P-CON}}$ OFF:PI control ON :P control	0 • 0
		0 • 1	<Zero clamp speed control> • After the motor is stopped (ZCLVL), the speed reference is disconnected to execute the zero speed stop function. After this it maintains the servo lock status. • The $\overline{\text{P-CON}}$ signal (1CN-15) is used to turn the zero clamp function ON and OFF.		$\overline{\text{P-CON}}$ OFF:Zero clamp function OFF ON :Zero clamp function ON	
		1 • 0	<Torque control I> • The motor output torque is controlled by the torque reference (T-REF). • The V-REF cannot be used.	Torque reference (T-REF)	None	
		1 • 1	<Torque control II> • The $\overline{\text{P-CON}}$ signal (1CN-15) is used for torque / speed control mode changeover. Troque control mode • The motor output torque is controlled by the torque reference (T-REF). • The speed limit can be entered from outside (V-REF). The V-REF voltage (+) limits both the forward and reverse running speeds. 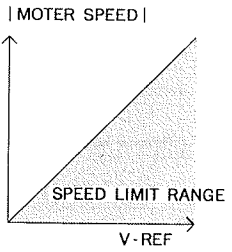 Speed control mode • The speed reference is entered from the V-REF. • The T-REF cannot be used.		$\overline{\text{P-CON}}$ OFF:Torque control ON :Speed control	

Notes : 1. The fault stop method in the torque control mode complies with bit 6
2. Selects the status based on the stop method selected for the overtravel status (bit 8).
3. Selects the mode switch operating condition. When the mode switch operates, the speed control mode changes from P•I control to P control. (Effective only for speed control)
4. When the setting of user constant Cn-01 is changed, turn OFF the power supply and restart the operation.

Table 2.12 Type SGDA User Constant Cn-02 (Memory Switch)

Selection	Bit No.	Setting	Description	Standard
Reverse Rotation Mode	Note 0	0	CCW : Forward Running	0
		1	CW : Forward Running	
Home Position Error Mask	1 (ABSO. PG only)	0	Home position error is detected.	0
		1	Home position error is not detected.	
Contact Reference Mode	2	0	Contact inputs $\overline{\text{P-CL}}$ and $\overline{\text{N-CL}}$ are used as power supply limit ON/OFF reference inputs.	0
		1	Contact inputs $\overline{\text{P-CL}}$ and $\overline{\text{N-CL}}$ are used as speed input reference selection(1st to 3rd speed) signals.	
Reserved	5, 4, 3		Not used	000
Reserved	7, 6		Not used	00
Motor Selection	8	0	Type SGM	Note 1
		1	Type SGMP	
Reserved	A		Not used	0
Integration Time Constant Setting	B	0	Unit : 1ms	
		1	Unit : 0.01ms	
Torque Reference Filter Type	C	0	Primary	0
		1	Secondary	
Reserved	E, D		Not used	0
Torque Reference Input Selection	F	0	Uses torque reference or torque feed-forward reference.	0
		1	Uses analog voltage reference as torque limit input.	

Notes :

1.

SERVOPACK Type	Factory Setting
SGDA-□□□S	0
SGDA-□□□SP	1

2. For the Cn-02 memory switch, always turn the power OFF and then ON after the setting is changed. This makes the new setting valid.

Table 2.13 Type SGDE User Constant Cn-01 (Memory Switch)

	Bit No.	Setting	Conditions	Standard
Sequence Input Selection	0	0	Uses servo ON input ($\overline{\text{S-ON}}$).	0
		1	The servo is ON at all times.	
	2	0	Uses forward rotation prohibited input ($\overline{\text{P-OT}}$).	0
		1	Forward running is permitted at all times.	
	3	0	Uses reverse rotation prohibited input ($\overline{\text{N-OT}}$).	0
		1	Reverse running is permitted at all times.	
Sequence Output Signal Changeover(TGON)	4	0	TGON signal is used as a signal output when rotating is detected.	0
		1	TGON signal is used as a signal when torque limit is detected.	
Abnormal Stop Selection	8	0	In the overtravel state, the dynamic brake stops the motor.	0
		1	In the overtravel state, MAX torque stops the motor.	
Control Mode Selection	B, A	0 • 0	Speed Control	0, 0
		0 • 1	Speed Control with zero-clamp	
		1 • 0	Torque Control 1	
		1 • 1	Torque Control 2	

Table 2.14 Type SGDE User Constant Cn-02 (Memory Switch)

Selection	Bit No.	Setting	Conditions	Standard
Reverse Rotation Mode	0	0	CCW : Forward Running	0
		1	CW : Forward Running	
Internal Setting Speed Selection	2	0	Internal setting speed selection function is not used.	0
		1	Internal setting speed selection function is used.	
Torque Reference Filter	C	0	Primary	0
		1	Secondary	
Torque Reference Input Selection	F	0	Used as torque reference input.	0
		1	Uses torque limit input as analog voltage reference.	

* Setting can be changed at software versions 4 or above.

Note : For the Cn-01 and Cn-02 memory switch, always turn the power OFF and then ON after the setting is changed. This makes the new setting valid.

Table 2.15 Type SGDB User Constant Cn-01 (Memory Switch)

	Bit No.	Setting				Factory Setting
Input signal enable/ disable	0	0		1		0
		Uses servo ON input (S-ON).		Does not use servo ON input (S-ON). Servo is always ON.		
	1	0		1		0
		Uses SEN signal input (SEN) when absolute encoder is used.		Does not use SEN signal input (SEN) when absolute encoder is used. Servopack automatically treats signal voltage as high level.		
	2	0		1		0
		Uses forward rotation prohibited input (P-OT).		Does not use forward rotation prohibited input (P-OT). Forward rotation is always possible.		
	3	0		1		0
		Uses reverse rotation prohibited input (N-OT).		Does not use reverse rotation prohibited input (N-OT). Reverse rotation is always possible.		
Reserved	4	Reserved : Setting=0 (do not change the setting)				0
Operation performed at recovery from power loss	5	0		1		0
		Resets servo alarm status at power recovery from its momentary power loss.		Remains in servo alarm status at power recovery from momentary power loss.		
Sequence selection at alarm condition	6	0		1		0
		Stops the motor by applying dynamic brake (DB) at base block.		Makes the motor coast to a stop at base block.		
	7	0		1		*1
		At base block, stops the motor by applying dynamic brake (DB) and then release DB.		At base block, stops the motor by applying dynamic brake (DB) but does not release DB.		
	8	0		1		0
		Stops the motor according to bit 6 setting when overtravel is detected (P-OT, N-OT).		Decelerates the motor to a stop by applying the torque specified in Cn-06 when overtravel is detected (P-OT, N-OT).		
	9	0		1		0
		When overtravel is detected (P-OT, N-OT), decelerates the motor to a stop by applying the torque specified in Cn-06 and then performs Servo OFF.		When overtravel is detected (P-OT, N-OT), decelerates the motor to a stop by applying the torque specified in Cn-06 and then turns the zero-clamp.		
Process selection for Servo OFF	A	0		1		0
		Clears error pulse at Servo OFF		Does not clear error pulse at Servo OFF		
Mode switch selection	B	0		1		0
		Uses mode switch function. Follows Cn-01 bits D, C		Does not use mode switch function.		
	D • C	0 • 0	0 • 1	1 • 0	1 • 1	0 • 0
		Uses internal torque reference as a condition (Level setting : Cn-0C)	Uses speed reference as a condition (Level setting : Cn-0D)	Uses acceleration as a condition (Level setting : Cn-0E)	Uses error pulse as a condition (Level setting : Cn-0E)	

Table 2.15 Type SGDB User Constant Cn-01 (Memory Switch) (Cont'd)

	Bit No.	Setting		Factory Setting
Encoder selection	E	0	1	*2
		Uses incremental encoder.	Uses absolute encoder.	
Reserved	F	Reserved : Setting=0 (do not change the setting)		0

□ : User constants must be set and checked before turning the motor power ON.

*1 Less than or equal to 1.5 kW : 1
Greater than or equal to 2.0 kW : 0
*2 If applicable motor is type SGMG, SGMS, SGM, SGMP : 0
Type SGMD : 1

NOTE For the Cn-01 memory switch, always turn the power OFF, then ON after changing the setting. This makes the new setting valid.

Table 2.16 Type SGDB User Constant Cn-02 (Memory Switch)

	Bit No.	Setting					Factory Setting
Rotation direction selection	0	0		1			0
		Defines counterclockwise (CCW) rotation as forward rotation.		Defines clockwise (CW) rotation as forward rotation (reverse rotation mode).			
Home position error processing selection	1	0		1			0
		Detects home position error (when absolute encoder is used).		Does not detect home position error.			
Analog speed limit function	2	0		1			0
		Does not use analog speed limit function		Uses analog speed limit function			
Reference pulse form	5·4·3	0·0·0	0·0·1	0·1·0	0·1·1	1·0·0	0·0·0
		Sign+Pulse	CW+CCW	A-phase+ B-phase (×1 multiplication)	A-phase+ B-phase (×2 multiplication)	A-phase+ B-phase (×4 multiplication)	
Analog monitor selection	6	0		1			0
		Outputs torque to TRQ-M		Outputs reference speed to TRQ-M			
	7	0		1			0
		Outputs speed to VTG-M		Outputs position error to VTG-M			
Analog current limit function	8	0		1			0
		Does not use analog current limit function		Uses analog current limit function			
Torque feed-forward function	9	0		1			0
		Does not use torque feed-forward function		Uses torque feed-forward function			
Clear signal	A	0		1			0
		Clears the error counter when an error counter clear signal is at high level		Clears the error counter on the rising edge of an error counter clear signal			
Reserved	B	Reserved : Setting=0 (do not change the setting)					0
Torque filter	C	0		1			*
		Uses torque filter as primary filter		Uses torque filter as secondary filter			
Reference pulse form	D	0		1			0
		Does not invert reference pulse logic		Inverts reference pulse logic			
Position error monitor	E	0		1			0
		Displays position error in×1 reference units while in monitor mode		Displays position error in×100 reference units while in monitor mode			
Reference pulse filter	F	0		1			0
		Selects filter time constant 'small'. (450 kpps max)		Selects filter time constant 'large'. (200 kpps max)			

*5.0 kW or less : 0, 6.0 kW or more : 1

NOTE For the Cn-02 memory switch, always turn the power OFF, then ON after changing the setting. This makes the new setting valid. However, bits 6, 7, E become valid immediately after setting.

Table 2.17 Type DR2 User Constant Cn-01 (Memory Switch)

	Bit No.	Setting				Factory Setting
Input signal enable/ disable	0	0 Uses servo ON input ($\overline{\text{S-ON}}$).		1 Does not use servo ON input ($\overline{\text{S-ON}}$). Servo is always ON.		0
	1	0 Uses SEN signal input (SEN) when absolute encoder is used.		1 Does not use SEN signal input (SEN)when absolute encoder is used. Servopack automatically treats signal voltage as high level.		0
	2	0 Uses forward rotation prohibited input (P-OT).		1 Does not use forward rotation prohibited input (P-OT). Forward rotation is always possible.		0
	3	0 Uses reverse rotation prohibited input ($\overline{\text{N-OT}}$).		1 Does not use reverse rotation prohibited input ($\overline{\text{N-OT}}$). Reverse rotation is always possible.		0
CLT signal switching	4	0 Uses CLT signal (CLT) as torque limit detection output.		1 Uses CLT signal (CLT)as speed coincide output.		0
—	5	Not used.		Not used		0
Sequence selection at alarm condition	6	0 Stops the motor by applying dynamic brake when an alarm arises.		1 Causes the motor to coast to a stop when an alarm arises.		0
	7	0 When an alarm arises, stops the motor by applying dynamic brake and then releases dynamic brake.		1 When an alarm arises, stops the motor by applying dynamic brake but does not release dynamic brake.		1
	8	0 Stops the motor according to bit 6 setting when overtravel is detected (P-OT, N-OT).		1 Decelerates the motor to a stop by applying the torque specified in Cn-06 when overtravel is detected (P-OT, N-OT).		0
	9	0 When overtravel is detected (P-OT, N-OT), decelerates the motor to a stop by applying the torque specified in Cn-06 and then turns the servo OFF.		1 When overtravel is detected (P-OT, N-OT), decelerates the motor to a stop by applying the torque specified in Cn-06 and then performs zero-clamp.		0
Control mode selection	B • A	0 • 0 Speed control	0 • 1 Speed control with zero-clamp function	1 • 0 Torque control I	1 • 1 Torque control II	0 • 0
Mode switch selection	D • C	0 • 0 Uses internal torque reference as a condition. (Level setting : Cn-0C)	0 • 1 Uses speed reference as a condition. (Level setting : Cn-0D)	1 • 0 Uses acceleration as a condition. (Level setting : Cn-0E)	1 • 1 Does not use mode switch function.	0 • 0
TGON signal function switch	E	0 Uses $\overline{\text{TGON}}$ signal as the motor running detection signal.		1 Uses $\overline{\text{TGON}}$ signal as the brake interlock signal.		0
Torque feed-forward function	F	0 Does not use torque feed-forward function.		1 Uses torque feed-forward function.		0

Table 2.18 Type DR2 User Constant Cn-02 (Memory Switch)

	Bit No.	Setting		Factory Setting
Rotation direction selection	0	0	1	0
		Defines counterclockwise (CCW) rotation as forward rotation.	Defines clockwise (CW) rotation as forward rotation (reverse rotation mode).	
Home position error processing selection	1	0	1	0
		Detects home position error (when absolute encoder is used).	Does not detect home position error.	
Contact input speed control	2	0	1	0
		Does not use contact input speed control.	Uses contact input speed control.	
Reserved	3・4 5	Reserved (not to be set)		0
Reserved	6	0	1	0
		Uses 1CN #16 pin as the torque reference monitor.	Uses 1CN #16 pin as the speed reference monitor.	
Reserved	7	Reserved (not to be set)		0
Motor selection	8	0	1	*
		SGM motor	SGMP motor	
Encoder selection	9	0	1	0
		Incremental encoder	Absolute encoder	
Reserved	A	Reserved (not to be set)		0
Selection of speed/torque or position control mode	B	0	1	0
		Speed/torque control mode selection	Not used.	
Torque reference filter type	C	0	1	0
		Primary	Secondary	
Reserved	E・D	Reserved (not to be set)		0
Torque reference input selection	F	0	1	0
		Uses torque reference or torque feed-forward reference.	Uses analog voltage reference as torque limit input.	

Notes :

1. The factory setting depends on the SERVOPACK type as shown below.

SERVOPACK Type	Factory Setting
DR2-□	0
DR2-□P	1

2. For the Cn-01 and Cn-02 memory switches, always turn the power OFF and then ON after changing the setting. This makes the new setting valid.

2.4.3 Digital Operator Jog Operation Mode Selection and Operating Procedure

(1) Digital Operator Jog Operation Mode Selection

When using this function during set up and test runs, external circuits or other devices do not have to be connected to the digital operator.
When user constant Cn-00 is set to 00, the operations are to be controlled from the digital operator.

Panel Display

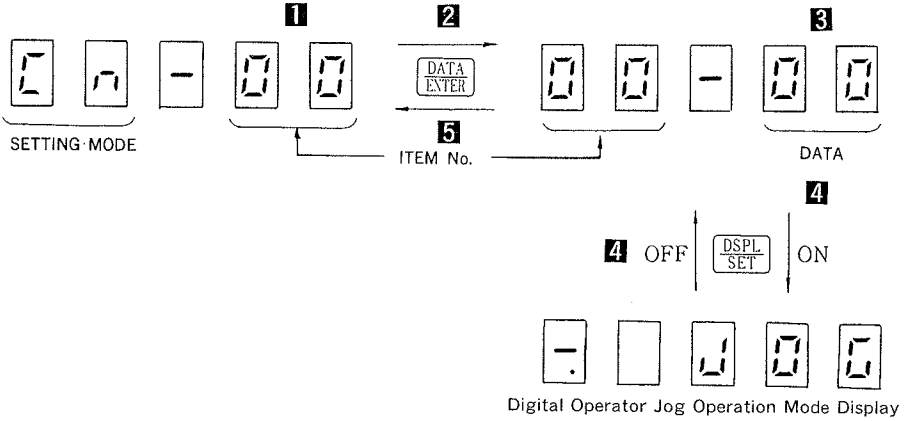

Fig. 2.6 Digital Operator Jog Operation Mode

1. Select the item number 00 with the (∧), (∨), (<) or (>) key.
2. With the DATA ENTER key, display the data related to the selected item number.
3. With the (∧), (∨), (<) or (>) key, select the number 00.
4. With the DSPL SET key, turn ON or OFF the monitor panel jog operation mode.
5. With the DATA ENTER key, return to the item No. display status.
6. Using the DSPL SET key, switch from the setting mode to the monitor mode.

(2) Digital Operator Jog Operation Procedure

For speed reference adjustment, use user constant Cn-10 (see Table 2.4).

1. With the (JOG SVON) switch, effect SVON / SVOFF changeover.
2. The motor runs in the forward direction while the (∧) key is held down.
3. The motor runs in the reverse direction while the (∨) key is held down.

2.4.4 Speed Reference Offset Adjustment

When user constant Cn-00 is set tool, the system enters the speed reference offset adjustment mode.

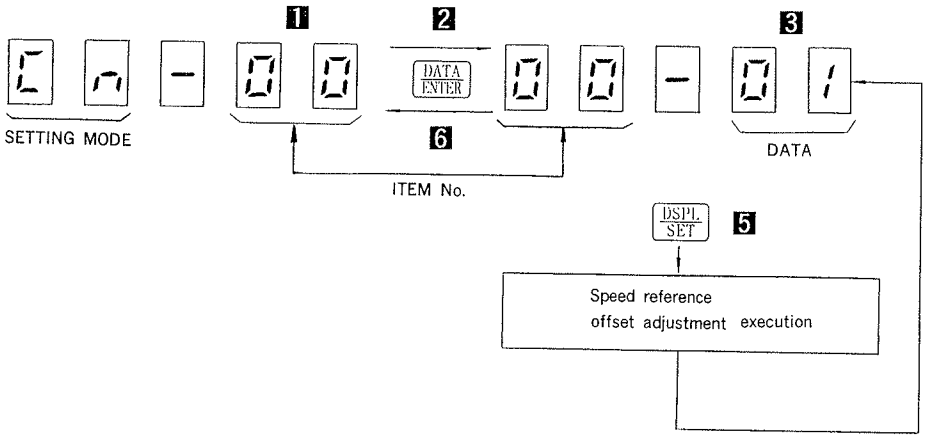

Fig. 2.7 Speed Reference Offset Adjustment

1. Select the item number 00 with the (∧), (∨), (<) or (>) key.
2. With the DATA/ENTER key, display the data related to the selected item number.
3. With the (∧), (∨), (<) or (>) key, select the number 01.
4. Apply the desired zero speed reference voltage with speed reference input. Apply the desired zero torque reference voltage with torque reference input.
5. With the DSPL/SET key, make speed reference offset adjustment and return to the user constant Cn-00 data display status.
6. With the DATA/ENTER key, return to the item No. display status.
7. Using the DSPL/SET key, switch from the setting mode to the monitor mode.

2.4.5 Clearing Fault Traceback Data

When user constant Cn-00 is set to 02, fault traceback data are cleared.

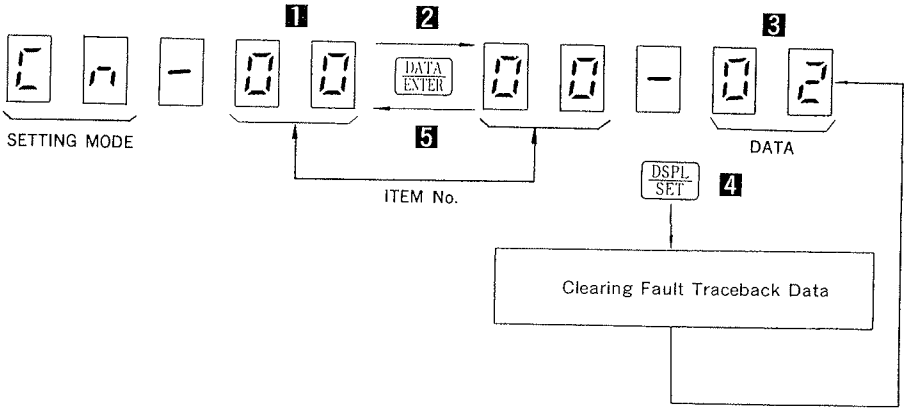

Fig. 2.8 Clearing Fault Traceback Data

1 Select the item number 00 with the (∧) , (∨) , (<) or (>) key.

2 With the DATA ENTER key, display the data related to the selected item number.

3 With the (∧) , (∨) , (<) or (>) key, select the number 02.

4 With the DSPL SET key, clear fault traceback data and return to the user constant Cn-00 data display status.

5 With the DATA ENTER key, return to the item No. display status.

6 Using the DSPL SET key, switch from the setting mode to the monitor mode.

2.4.6 Speed Reference Offset Manual Adjustment

(1) Mode Setting in Speed Reference Offset Manual Adjustment

Basic functions are the same as for speed reference offset adjustment. The amount of offset can be input directly.
When user constant Cn-00 is set to 03, the system enters the speed reference offset manual adjustment mode.

Panel Display

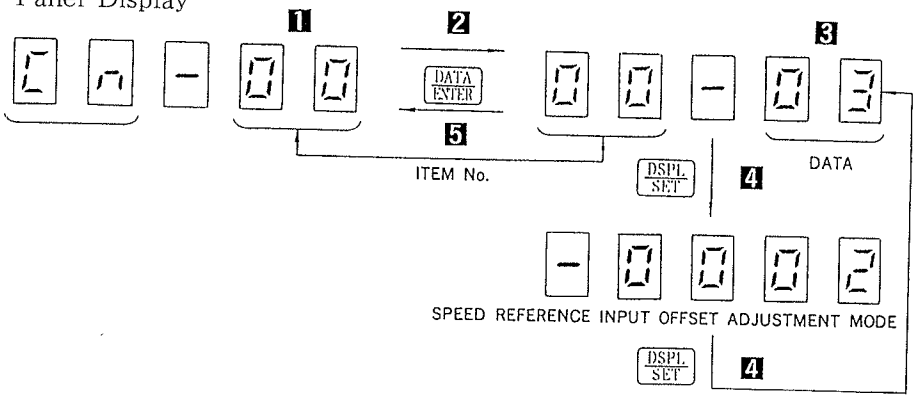

Fig. 2.9 Speed Reference Offset Manual Adjustment Mode

1. Set up item number 00 with the (∧) , (∨) , (<) or (>) key.
2. With the DATA ENTER key, display the data related to the selected item number.
3. With the (∧) , (∨) , (<) or (>) key, select the number 03.
4. With the DSPL SET key, switch the adjustment mode.
5. With the DATA ENTER key, return to the item No. display status.
6. Using the DSPL SET key, switch from the setting mode to the monitor mode.

(2) Speed Reference Offset Manual Adjustment

Input a voltage that will obtain zero speed reference to the speed reference input. Input a voltage that will obtain zero torque reference to the torque reference input. (Normally 0V)

1. While the (∧) key is held down, the offset is added to the forward running side.
2. While the (∨) key is held down, the offset is added to the reverse running side.
3. Using the (DSPL / SET) key, store offset data, then enter the monitor mode.

Offset adjustment is performed so that the LED indication may basically become zero; however, the perfect zero status of indication does not always offer optimum adjustment. Therefore, adjust the offset carefully, taking actual motor rotation into consideration.

2.4.7 Check of Motor

(1) Check Method of Motor

When user constant Cn-00 is set to 04, the system enters the motor check mode.

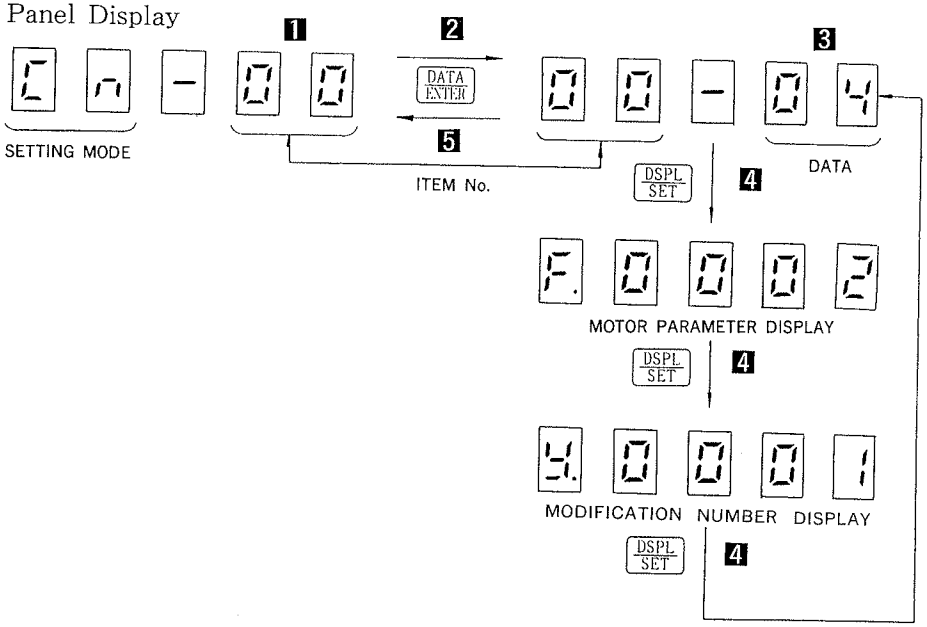

Fig. 2.10 Switch Functions in Motor Parameter Check

1. Set up item number 00 with the (∧), (∨), (<) or (>) key.
2. With the DATA/ENTER key, display the data related to the selected item number.
3. With the (∧), (∨), (<) or (>) key, select the number 04.
4. With the DSPL/SET key, check the motor parameter.
5. With the DATA/ENTER key, return to the item No. display status.
6. Using the DSPL/SET key, switch from the setting mode to the monitor mode.

(2) Parameter Display

Motor Parameter

Motor Capacity

SGD	SGDA SGDE DR2	SGDB
9E : 30W b2 : 50W 01 : 100W 02 : 200W 04 : 400W 08 : 750W	9E : 30W b2 : 50W 01 : 100W 02 : 200W 03 : 300W 04 : 400W 08 : 750W	05 : 300W 400W 450W 0A : 600W 750W 850W 900W 1kW 0F : 1.2kW 1.3kW 1.5kW 14 : 1.8kW 2.0kW 1E : 2.2kW 2.9kW 3.0kW 2C : 3.2kW 4.0kW 4.4kW 3C : 5.5kW 6.0kW 4B : 7.5kW 6E : 11.0kW

Motor Type

SGD	SGDA DR2	SGDE	SGDB
0 : SGM200V 1 : SGM100W	0 : SGM200V 1 : SGM100V 2 : SGMP200V 3 : SGMP100V	4 : SGME200V 5 : SGME100V	0 : Σ Series

Modification Index

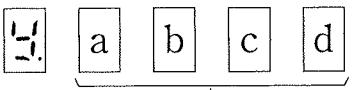

Modification No. (Hexadecimal display)

$(a \times 16^3 + b \times 16^2 + C \times 16 + d)$ = Modification No.

Nos. Corresponding to Alphabets

A = 10
b = 11
C = 12
d = 13
E = 14
F = 15

2.4.8 Auto Tuning

(1) Mode Setting in Auto Tuning

When user constant Cn-00 is set to 05, the system enters the auto tuning mode.

Panel Display

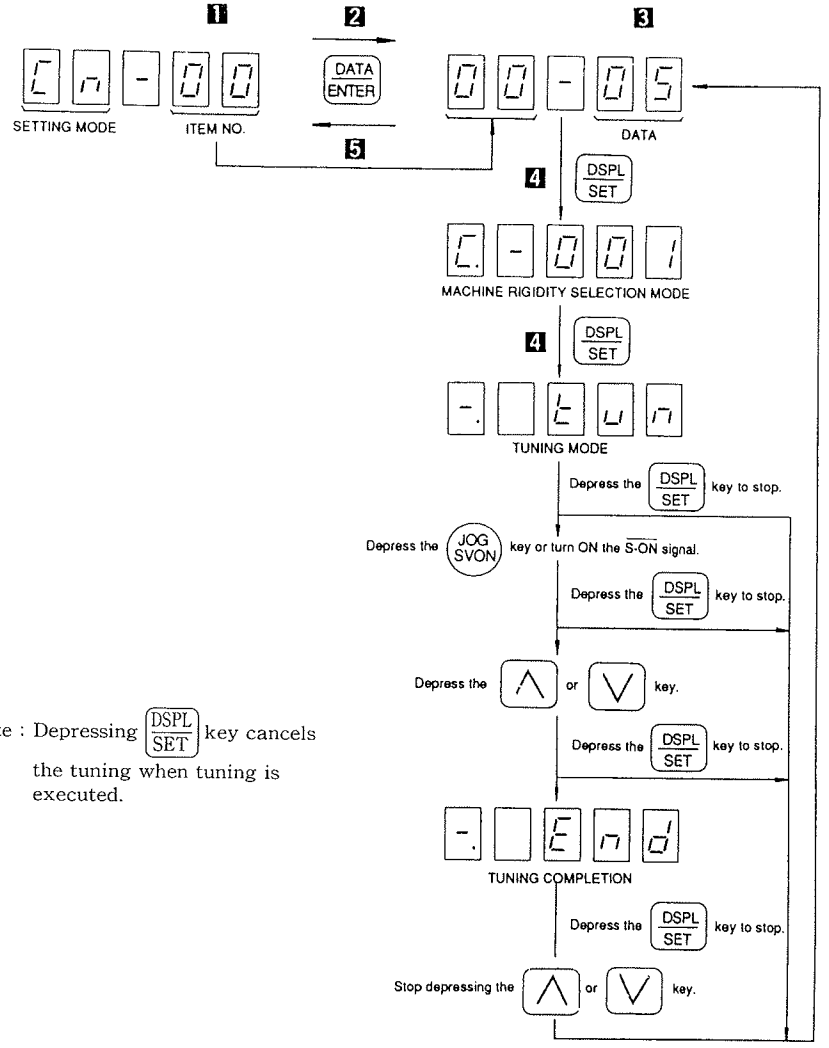

Note : Depressing DSPL SET key cancels the tuning when tuning is executed.

Fig. 2.11 Auto Tuning Mode

1. Set up item number 00 with the (∧), (∨), (<) or (>) key.
2. With the DATA/ENTER key, display the data related to the selected item number.
3. With the (∧), (∨), (<) or (>) key, select the number 05.
4. With the DSPL/SET key, switch to the machine rigidity selection mode or tuning mode.
5. With the DATA/ENTER key, return to the item No. display status.
6. Using the DSPL/SET key, swich from the setting mode to the monitor mode.

(2) Tuning Method

(a) Speed setting

When tuning is being performed, the maximum value of speed reference is set by user constant Cn-10. Set the value to approximately 500 r/min. (If the value is too small, auto tuning cannot be performed properly.)

The motor runs intermittently when the (∧) or (∨) key is held down. (The motor does not run at the same speed continuously.)

(b) Machine rigidity selection

According to the machine rigidity, select the following :

C-001 : Low response

C-002 : Medium response

C-003 : High response

When the machine rigidity is not defined, select the middle-speed response.

• Machine vibration

When entering the servo ON status with the JOG/SVON switch or machine vibrates suddenly at depressing the (∧) or (∨) key, depress the DSPL/SET key and stop the tuning operation.

Then depress the DSPL/SET key to enter the machine rigidity selection mode, and set the level of machine rigidity selection at one level lower.

- When tuning is not completed

  When tuning is not completed even though the machine does not vibrate, depress the [DSPL/SET] key to stop the tuning operation.

  Then depress the [DSPL/SET] key to enter the machine rigidity selection mode and set the level of machine rigidity selection at one level higher.

(c) Tuning

1 With the (JOG/SVON) switch, effect SVON/SVOFF changeover.

2 The motor runs in the forward direction while the (∧) key is held down.

3 The motor runs in the reverse direction while the (∨) key is held down.

Note: If the machine vibrates when depressing the (∧) or (∨) key, stop depressing the (∧) or (∨) key since the gain is decreased.

4 With the tuning completion, [-.][ ][E][n][d] is displayed and power supply to the motor is stopped.

Stop depressing the (∧) or (∨) key. Display is returned to [0][0][-][0][5].

(d) Input signals

- The P-OT signal, N-OT signal and SEN signal (absolute encoder only) are enabled during auto tuning. Input the P-OT signal, N-OT signal and SEN signal (absolute encoder only) during auto tuning.
  To conduct auto tuning without inputting these signals, set user constant Cn-01 Bits 1, 2, and 3 to 1.
- Auto tuning is not possible during overtravel (P-OT or N-OT signal OFF).
- Conduct auto tuning when no overtravel has occurred (both P-OT and N-OT signal ON).
- If using the $\overline{\text{S-ON}}$ signal to set the servo ON status, display [-.][ ][t][U][n] before turning ON the $\overline{\text{S-ON}}$ signal.

2.4.9 Check of Software Version

(1) Mode Setting in Software Version Check

When user constant Cn-00 is set to 06, the system enters the software version check mode.

Panel Display

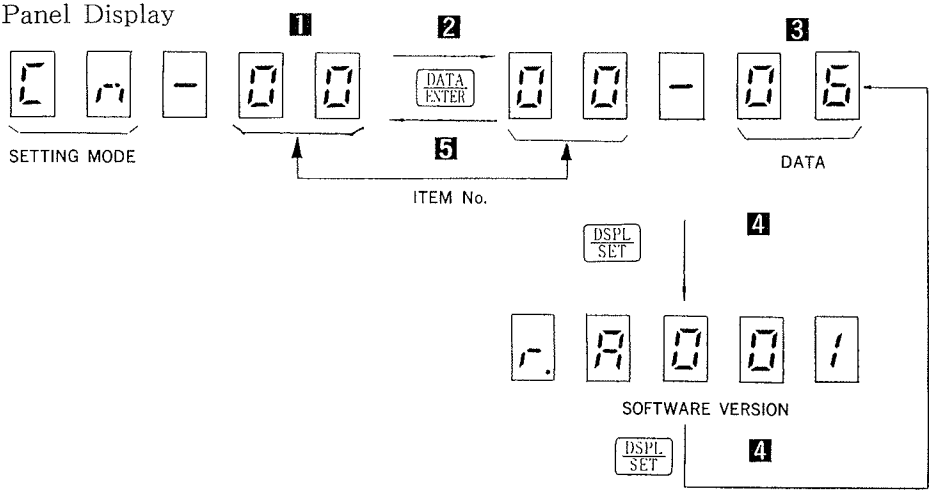

Fig. 2.12 Software Version Check Mode

1 Set up item number 00 with the (∧) , (∨) , (<) or (>) key.

2 With the DATA ENTER key, display the data related to the selected item number.

3 With the (∧) , (∨) , (<) or (>) key, select the number 06.

4 With the DSPL SET key, display the software version.

5 With the DATA ENTER key, return to the item No. display status.

6 Using the DSPL SET key, switch from the setting mode to the monitor mode.

(2) Software Version Display

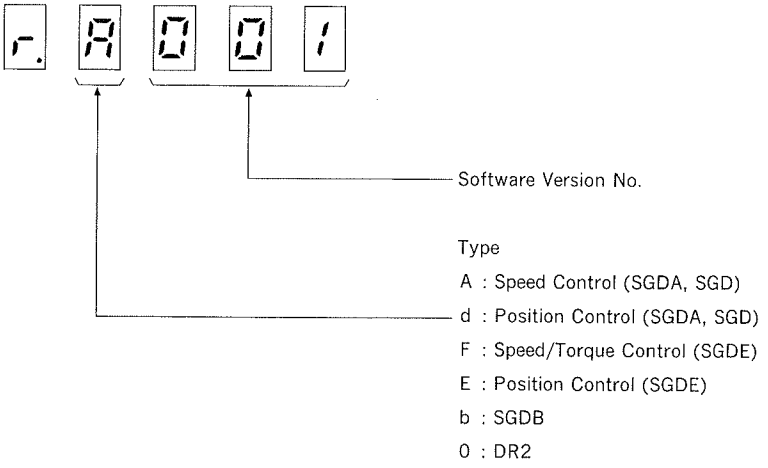

2.5 MONITOR MODE

In this mode, the speed reference, torque reference, and other data can be monitored on the digital operator.
Table 2.7 list the data that can be monitored

Table 2.19 Data Monitored

Monitor No.	Date Monitored	
0 0	Feedback Speed	(r/min)
0 1	Speed Reference	(r/min)
0 2	Torque Reference	(%)
0 3	No. of Pulses from Phase-U edge	(Pulse)
0 4	Electrical Angle	(deg)
0 5	Internal Status Bit Display 1	(Refer to Table 2.20)

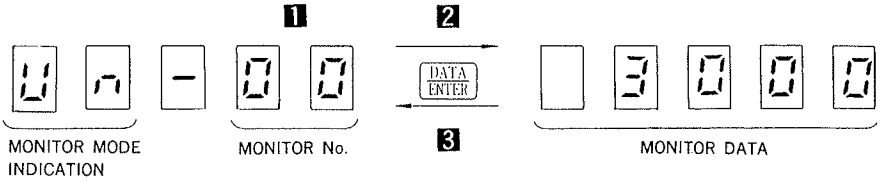

Fig. 2.13 Switch Functions in Monitor Mode

1 With the (∧) or (∨) key, select a desired monitor No.

2 With the DATA/ENTER key, initiate monitor display.

3 Using the DATA/ENTER key, return to the monitor No. selection status.

4 With the DSPL/SET key, switch from the monitor mode to the fault traceback mode.

Table 2.20 Bit Indication of Monitor Mode Un-05 Internal Status

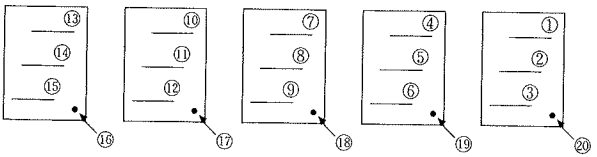

Bit No.	Symbol	Contents		Remarks
①	SVALM	Servo Alarm		
②	DBON	Dynamic Braking		
③	DIR	Reverse Run Mode		
④	TGON	Motor Running (Motor speed is TGON level or higher)		Select by setting of bit 4 of user constant Cn-01.
	CLT	Torque Limit		
	TGON	Light goes ON with moter rotating speed higher than $\overline{\text{TGON}}$ level.		Type DR2 : Selected by bit E of user constant Cn-01.
	Brake Interlock	Light goes ON when brake is released at brake interlock ON.		
⑤	V-CMP	Speed Agreed		
	Torque Limit Detection	Light goes ON when internal torque reference is higher than torque limit detection level.		Type DR2 : Selected by bit 4 of user constant Cn-01.
⑥	MSON	Mode Switch ON		
⑦	P-CL	Forward Current Limit	Internal setting speed	
⑧	N-CL	Reverse Current Limit		
⑨	B-ON	Motor under Present Condition		
⑩	PA	Phase-A *		
⑪	PB	Phase-B *		
⑫	PC	Phase-C *		
⑬	PU	Phase-U *		Incremental encoder only
⑭	PV	Phase-V *		Incremental encoder only
⑮	PW	Phase-W *		Incremental encoder only
⑯	SVON	Servo ON		
⑰	P-CON	P Operation Input		Select by setting of bit A or B of user constant Cn-01 or bit 2 of user constant Cn-02.
	ZCLMP	Position Loop Operation at Stopping		
	DR	Rotating Direction Input by External Setting Speed (ON at reverse, OFF at forward)		
⑱	P-OT	Forward Running Prohibit Input		
⑲	N-OT	Reverse Running Prohibit Input		
⑳	SEN	SEN Signal Input		Absolute encoder only

*Type SGA : Light goes OFF when the input signal is set to high level.
Type SGDA, SGDE : Light goes ON when the input signal is at high level.

Table 2.21 Bit Indication of Monitor Mode Un-05 Internal Status (Type SGDB)

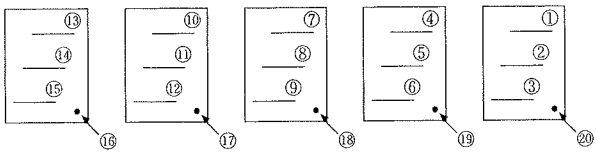

Bit No.	Symbol	Contents		Remarks
①	SVALM	Servo Alarm		1CN-31 (ALM)
②	DBON	Dynamic Braking		
③	DIR	Reverse Run Mode		Cn-02 bit 0, 2CN-7 (DIR)
④	TGON	Motor Running (Motor speed is TGON level or higher)		
⑤	V-CMP COIN	Speed Agreed		
⑥	MSON	Mode Switch ON		
⑦	P-CL	Forward Current Limit	Internal setting speed	1CN-45 ($\overline{\text{P-CL}}$)
⑧	N-CL	Reverse Current Limit		1CN-46 ($\overline{\text{N-CL}}$)
⑨	B-ON	Motor under Present Condition		
⑩	PA	Phase-A *		2CN-16 (PA), 2CN-17 (*PA)
⑪	PB	Phase-B *		2CN-18 (PB), 2CN-19 (*PB)
⑫	PC	Phase-C *		2CN-14 (PC), 2CN-15 (*PC)
⑬	PU	Phase-U *		
⑭	PV	Phase-V *		
⑮	PW	Phase-W *		
⑯	SVON	Servo ON		1CN-40 ($\overline{\text{S-ON}}$)
⑰	P-CON DR	P Operation Input Rotating Direction Input by External Setting Speed (ON at reverse, OFF at forward)		1CN-41 ($\overline{\text{P-CON}}$)
⑱	P-OT	Forward Running Prohibit Input		1CN-42 (P-OT), Cn-01 bit 2
⑲	N-OT	Reverse Running Prohibit Input		1CN-43 (N-OT), Cn-01 bit 3
⑳	SEN	SEN Signal Input		1CN-4 (SEN), Cn-01 bit 1

Table 2.22 Bit Indication of Monitor Mode Un-05 Internal Status (Type SGDB)

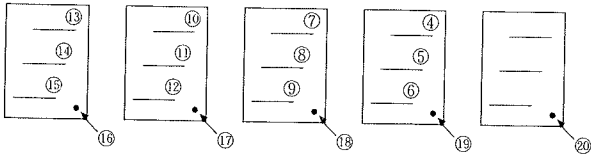

Bit No.	Symbol	Contents	Remarks
④	CLT		
⑤	BK		
⑥	OLWRN		
⑦	P-ON		
⑧	S-RDY	Servo Ready	
⑨~⑳		Not used	

2.6 FAULT TRACEBACK MODE

In this mode, information on past fault occurrences can be displayed.

- Information on up to 10 past fault occurrences can be stored.
- When a fault is reset or the control power is turned ON, traceback data A.99 is saved. (These data are also counted as one of a total of 10 stored items of fault information.)
- For the relationship between traceback data and fault descriptions, refer to Table 2.20.

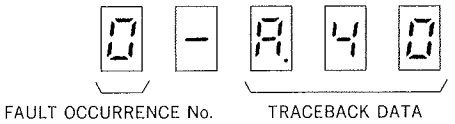

Fig. 2.14 Fault Traceback Mode

1. With the DSPL/SET key, select fault traceback mode.
2. With the (∧) or (∨) key, increase or decrease the fault occurrence number. The fault information related to the selected number is then displayed. (The higher the fault occurrence number, the older the fault occurrence.)
3. With the DSPL/SET key, switch from the fault traceback mode to the status display mode.

Table 2.23 Error Displays With Digital Operator and Traceback Data

Digital Operator (Traceback Data)	Detection	Remarks
A. 00	Absolute Encoder Data Error	Only when absolute encoder is used (Type SGDB, DR2)
A. 01	Absolute Encoder Data Error	Only when absolute encoder is used (Type SGDA).
A. 02	User Constant Breakdown	
A. 04	User Constant Setting Error	
A. 10	Overcurrent	
A. 20	Blown Fuse	Type DR2
A. 30	Regeneration Error	Type SGDB, DR2
A. 40	Overvoltage	Type SGDA, SGDE, SGD
	Main Circuit Voltage Error	Type SGDB
A. 51	Feedback Overspeed	Detected at 110% of max. speed.
A. 70	Overload	Type SGDA, SGDE, DR2
A. 71	Overload	Momentary overload
A. 72	Overload	Continuous overload
A. 80	Absolute Encoder Error	Only when absolute encoder is used (Type SGDA, SGDB, DR2)
A. 81	Absolute Encoder Backup Error	Only when 12-bit absolute encoder is used.
A. 82	Absolute Encoder Check sum Error	Only when 12-bit absolute encoder is used.
A. 83	Absolute Encoder Battery Alarm	Only when 12-bit absolute encoder is used.
A. 84	Absolute Encoder Data Error	Only when 12-bit absolute encoder is used.
A. 85	Absolute Encoder Overspeed	Only when 12-bit absolute encoder is used.
A. A1	Heat sink overheat	Type SGDB
A. b1	Reference Input Read Error	
A. C1	Overrun	
A. C2	Encoder Phase Detection Fault	Only when incremental encoder is used.
A. C3	PA-, PG-phase Disconnection of PG Signal Line	
A. C4	PC Disconnection	
A. C5	Incremental Encoder Initial Pulse Error	Type DR2
A. C6	Full-closed Loop A-, B-phase Disconnection	Type DR2
A. C7	Full-closed Loop C-phase Disconnection	Type DR2
A. F1	Power Supply Line Open Phase	Type SGDB
A. F3	Momentary Power Loss Error	
A. 99	Not Applicable to Alarm	
CPF 00	Digital Operator Transmission Error 1	Digital operator error Not detected as traceback data.
CPF 01	Digital Operator Transmission Error 2	

3. OPERATION MOTHOD OF HAND-HELD TYPE DIGITAL OPERATOR (JUSP-OP02A-1) FOR POSITIONING CONTROL

This section explains the operation method when SERVOPACK for positioning control is operated using a hand-held type digital operator.

3.1 SWITCH OPERATION

Fig.3.1 shows the digital operator. The digital operator has various functions as listed by modes in Par.3.2, "DIGITAL OPERATOR FUNCTIONS" (p.34) .

Notes:
1. The data set by the digital operator is retained in SERVOPACK even after the power is turned OFF.
2. Even if the power is turned OFF after fault occurrence, the fault data is retained in memory. Therefore, it is possible to check the fault data after the power is turned back ON.
3. The monitor mode can be changed even during operations.

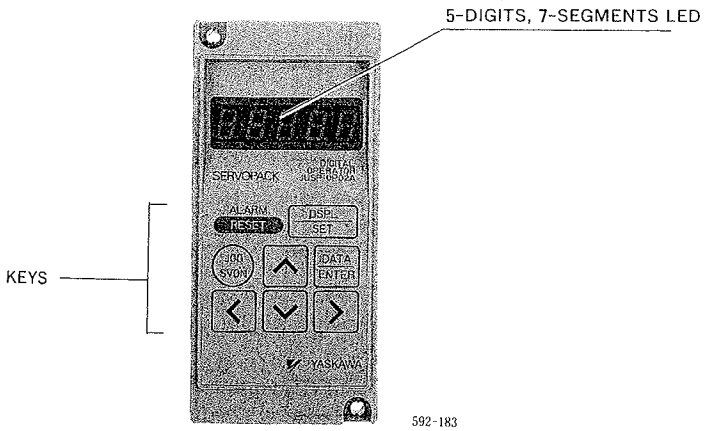

Fig. 3.1 DIGITAL OPERATOR (HAND HELD TYPE) JUSP-OP02A-1

3.2 DIGITAL OPERATOR FUNCTIONS

Table 3.1 shows the digital operator's functions. The status display is the default when control power is turned ON. To change the mode, use DSPL / SET key as shown in Fig.3.2.

Table 3.1 Digital Operator Functions

Mode	Function	
Status Indication Mode	Various Status Indications • Base Block • On Operation • Fault	(See Par.3.3)
Setting Mode	Refer to "User Constant Setting."	(See Par.3.4.1)
	• Operation (JOG) from digital operator	(See Par.3.4.3)
	• Clearing Fault Traceback Data	(See Par.3.4.4)
	• Check of Motor	(See Par.3.4.5)
	• Auto Tuning	(See Par.3.4.6)
	• Check of Software Version	(See Par.3.4.7)
Monitor Mode	Various Monitoring • Speed • Speed Reference (At external setting speed control) • Torque Reference • Number of Pulses from Origin (Phase-U) • Electrical Angle • Internal Status Bit • Reference Pulse Speed Indication • Position Error	(See Par.3.5)
Fault Traceback Indication Mode	• Fault History	(See Par.3.6)

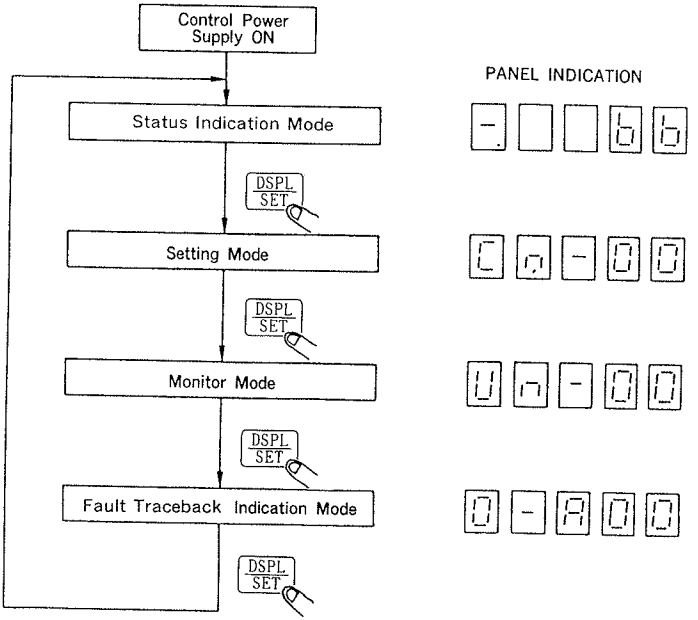

Fig. 3.2 Mode Changeover

3.3 STATUS INDICATION MODE

When this mode is selected, the condition of SERVOPACK is indicated with bits and codes as shown in Fig.3.3. Table 3.2 shows the bit data contents. Table 3.3 shows the codes and conditions.

ALARM (RESET) : Alarm reset switch

Panel Display

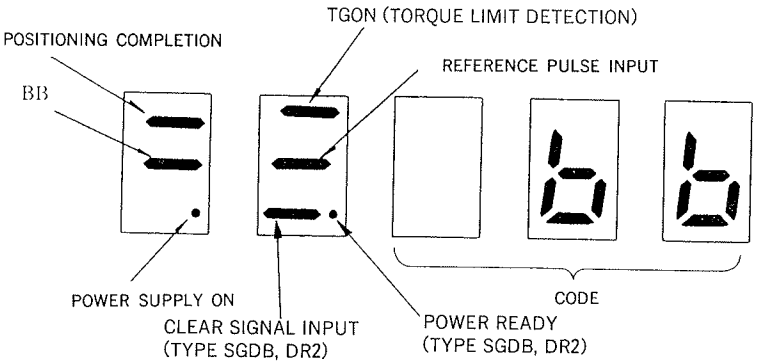

Notes :

1. TGON or current limit detection is displayed according to bit 4 of user constant Cn-01 (Type SGD, SGDA, SGDE). TGON is displayed at type DR2.
2. TGON or brake interlock signal is displayed according to bit E of user constant Cn-01 (Type DR2).
3. Torque limit detection or speed agreed can be selected according to bit 4 of user constant Cn-01 (Type DR2).

Figure 3.3 Bit Data Constants

3.3 STATUS INDICATION MODE (Cont'd)

Table 3.2 Bit Data Contents

Bit Data	Contents	Remarks
Power Supply ON	Light goes ON with power supply ON.	Type SGDA, SGDE, SGDB
	Light goes ON with control power supply ON. Light goes OFF with control power supply OFF.	Type SGDB
BB	Light goes ON with base block, and goes OFF with servo ON.	
Positioning Completion	Light turns ON when lag pulses of error counter reach the position completion width range set in user constant Cn-1B.	
Torque Limit Detection	Light goes ON when internal torque reference is higher than torque limit detection level.	Type DR2 : Selected by bit 4 of user constant Cn-01.
TGON	Light goes ON with motor rotating speed higher than TGON level.	Type SGD, SGDA, SGDE : Selected by bit 4 of user constant Cn-01. Type SGDB : TGON
Torque Limit Detection	Light goes ON when torque reference reaches the torque limit value.	
TGON	Light goes ON with motor rotating speed higher than TGON level.	Type DR2 : Selected by bit E of user constant Cn-01.
Brake Interlock Signal	Light goes ON when brake is released at brake interlock ON.	
Reference Pulse Input	Light goes ON at reference pulse input.	
Clear Signal Input	Light goes ON at clear signal input.	Only type SGDB, DR2

Table 3.3 Codes and Status

Code	Condition
bb	Base Block
run	On Operation
Pot	Forward Running Prohibited
not	Reverse Running Prohibited
A.00	Alarm Status Refer to Table 3.24.

3.4 SETTING MODE

In this mode, the following operrations can be performed.

- User constant setup and monitor
- Jog operations from the digital operator
- Fault traceback data clearing
- Check of mother parameters
- Auto. tuning
- Check of software version

3.4.1 User Constant (Data) Setup and Monitor (Cn-03 to Cn-27)

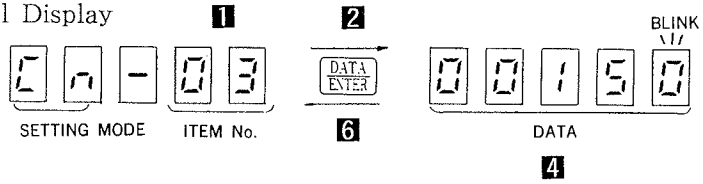

Fig. 3.4 User Constant Setting

1 Set up the item number with the (∧) , (∨) , (<) ,or (>) key.
- With the (<) or (>) key, choose a setup digit. The chosen digit starts blinking to indicate that its numerical value can be changed.
- With the (∧) or (∨) key, increase or decrease the numerical value until the desired value is obtained.

2 With the DATA/ENTER key, display the data related to the selected item number.

3 With the (∧) , (∨) , (<) , or (>) key, set up the data. (The same operation as stated in 1 .)

4 Retain the data with the DSPL/SET key.

5 Repeat steps 1 through 4 as needed.

6 With the DATA/ENTER key, return to the item No. display status

7 Using the DSPL/SET key, switch from the setting mode to the monitor mode.

3.4.1 User Constant (Data) Setup and Monitor (Cont'd)

Table 3.4, 3.5, 3.6, 3.7, 3.8 show user constants (Constant Setting).

Table 3.4 Type SGD User Contants List

	User Constant	Symbol	Name	Unit	Lower Limit	Upper Limit	Setting Prior to Shipment	Remarks
Gain Constants	Cn-04	LOOPHZ	Speed Loop Gain	Hz	1	2000	80	Note1
	Cn-05	PITIME	Speed Loop Intergration Time	ms	2	10000	20	
	Cn-1A	POSGN	Position Loop Gain	1/S	1	500	40	
	Cn-1C	BAISLV	Bias	r/min	0	450	0	
	Cn-1D	FFGN	Feed Forward	%	0	100	0	
Torque Constants	Cn-06	EMGTRQ	Emergency Stop Torque	%	0	Max.Torque	Max.Torque	OT Mode Note
	Cn-08	TLMTF	Forward Running Torque Limit	%	0	Max.Torque	Max.Torque	Note
	Cn-09	TIMTR	Reverse Running Torque Limit	%	0	Max.Torque	Max.Torque	Note
	Cn-17	TRQFIL	Torque Reference Filter Time	100μs	0	250	4	
	Cn-18	CLMIF	Forward External Current Limit	%	0	Max.Torque	100	Note
	Cn-19	CLMIR	Reverse External Current Limit	%	0	Max.Torque	100	Note
Sequence Constants	Cn-07	SFSACC	Soft Start Time (Acceleration)	ms	0	10000	0	Note4
	Cn-23	SFSDEC	Soft Start Time (Deceleration)	ms	0	10000	0	Note4
	Cn-0B	TGONLV	Zero-speed Level	r/min	1	Max Speed	20	
	Cn-12	BRKTIM	Delay Time from Braking Reference to SVOFF	10ms	0	50	0	
	Cn-15	BRKWAI	Brake Timing at Motor Rotation (Speed level at which brake reference is output.)	r/min	0	Max Speed	100	
	Cn-16	BRKSPD	Brake Timing at Motor Rotation (Waiting time from SVOFF to brake reference output.)	10 ms	10	100	50	

100% = rated torque

Notes:

1. Factory setting of Cn-04 (speed loop gain) is determined by the following conditions :
   Load inertia $\leqq$ motor inertia $\times$ 3
   Be sure to set the value of Cn-04 to 40 or less when motor is rotated without load. If the value has been kept at the factory setting, the motor may oscillate.

2. After modifying Cn-0A, 11, 24 and 25, turn OFF power and start up again. The modified value takes effect only after restarting.

3. Electronic gear ratio (Cn-24, Cn-25) : $0.01 \leqq \frac{B(Cn-24)}{A(Cn-25)} \leqq 100$

4. Soft start function is effective at jog operation or internally set speeds selection. Soft start function is not effective when pulse train is used as reference.

Table 3.4 Type SGD User Contants List

	User Constant	Symbol	Name	Unit	Lower Limit	Upper Limit	SettingPrior to Shipment	Remarks
Encoder Pulse Constants	Cn-0A	PGRAT	PG Dividing Ratio	P/R	16	32768	Encoder Number of Pulses 2048	Note2
	Cn-11	PULSNO	Number of Encoder Pulses	P/R	513	32768	Encoder Number of Pulses 2048	Note2
Other Constants	Cn-0C	TRQMSW	Mode Switch (Torque Reference)	%	0	Max.Torque	200	Note
	Cn-0D	REFMSW	Mode Switch (Speed Reference)	r/min	0	Max.Speed	0	
	Cn-0E	ACCMSW	Mode Switch (Motor Acceleration/Detection)	10(r/min)/s	0	3000	0	
	Cn-0F	ERPMSW	Mode Switch (Error Pulses)	Reference Unit	0	10000	10	
	Cn-10	JOGSPD	JOG Speed	r/min	0	Max.Speed	500	
	Cn-1E	OVERLV	Overflow	×256 Reference Unit	1	32767	1024	
	Cn-1F	SPEED1	1st Speed	r/min	0	Max.Speed	100	
	Cn-20	SPEED2	2nd Speed	r/min	0	Max.Speed	200	
	Cn-21	SPEED3	3rd Speed	r/min	0	Max.Speed	300	
	Cn-26	ACCTME	Position Reference Accel/Decel Time Constant (Smoothing)	0.1ms	0	640	0	
	Cn-27	FFFILT	Feed Forward Reference Filter	0.1 ms	0	640	0	
Electronic Gear	Cn-24	RATB	Electronic Gear Ratio (molecule)		1	65535	4	Note2,3
	Cn-25	RATA	Electronic Gear Ratio (denominator)		1	65535	1	Note2,3

100% = rated torque

Notes:

1. Factory setting of Cn-04 (speed loop gain) is determined by the following conditions :
   Load inertia ≦ motor inertia × 3
   Be sure to set the value of Cn-04 to 40 or less when motor is rotated without load. If the value has been kept at the factory setting, the motor may oscillate.

2. After modifying Cn-0A, 11, 24 and 25, turn OFF power and start up again. The modified value takes effect only after restarting.

3. Electronic gear ratio (Cn-24, Cn-25) : $0.01 \leqq \frac{B(Cn-24)}{A(Cn-25)} \leqq 100$

4. Soft start function is effective at jog operation or internally set speeds selection. Soft start function is not effective when pulse train is used as reference.

Table 3.5 Type SGDA User Constants List

	User Constant	Symbol	Name	Unit	Lower Limit	Upper Limit	Setting Prior to Shipping	Remarks
Gain Related Constants	Cn-04	LOOPHZ	Speed loop gain	Hz	1	2000	80	See note 2
	Cn-05	PITIME	Speed loop integration time constant	ms	2	10000	20	See note 2
	Cn-1A	POSGN	Position loop gain	1/s	1	200	40	See note 2
	Cn-1C	BIASLV	Bias	r/min	0	450	0	
	Cn-1D	FFGN	Feed-forward	%	0	100	0	
	Cn-26	ACCTME	Position reference acceleration/ deceleration time constant	100 μ s	0	640	0	
	Cn-27	FFFILT	Feed-forward reference filter	100 μ s	0	640	0	
Torque Related Constants	Cn-06	EMGTRQ	Emergency stop torque	%	0	Maximum torque	Maximum torque	
	Cn-08	TLMTF	Forward rotation torque limit	%	0	Maximum torque	Maximum torque	
	Cn-09	TLMTR	Reverse rotation torque limit	%	0	Maximum torque	Maximum torque	
	Cn-17	TRQFIL	Torque reference filter time constant	100 μ s	0	250	4	
	Cn-18	CLMIF	Forward external torque limit	%	0	Maximum torque	100	
	Cn-19	CLMIR	Reverse external torque limit	%	0	Maximum torque	100	
Sequence Related Constants	Cn-07	SFSACC	Soft start time (acceleration)	ms	0	10000	0	See note 4
	Cn-23	SFSDEC	Soft start time (deceleration)	ms	0	10000	0	See note 4
	Cn-0B	TGONLV	Zero-speed level	r/min	1	Maximum speed	20	
	Cn-12	BRKTIM	Time delay from brake reference until servo OFF	10 ms	0	50	0	
	Cn-15	BRKSPD	Speed level for brake reference output during motor operation	r/min	0	Maximum speed	100	

Table 3.5 Type SGDA User Constants List (Cont'd)

Category	User Constant No.	Code	Name	Unit	Lower Limit	Upper Limit	Factory Setting	Remarks
Sequence Related Constants	Cn-16	BRKWAI	Output timing of brake reference during motor operation	10 ms	10	100	50	
	Cn-1B	COINLV	Positioning complete range	Reference unit	0	250	7	
Pulse Related Constants	Cn-0A	PGRAT	Dividing ratio setting	P/R	16	32768	2048	Note 1
	Cn-11	PULSNO	Number of encoder pulses	P/R	513	32768	2048	Note 1
	Cn-24	RATB	Electronic gear ratio (numerator)		1	65535	4	Note 3
	Cn-25	RATA	Electronic gear ratio (denominator)		1	65535	1	Note 3
Other Constants	Cn-0C	TRQMSW	Mode switch (torque reference)	%	0	Maximum torque	200	
	Cn-0D	REFMSW	Mode switch (speed reference)	r/min	0	Maximum speed	0	
	Cn-0E	ACCMSW	Mode switch (acceleration reference)	10 (r/min)/s	0	3000	0	
	Cn-0F	ERPMSW	Mode switch (error pulse)	Reference unit	0	10000	10000	
	Cn-10	JOGSPD	Jog speed	r/min	0	Maximum speed	500	
	Cn-1E	OVERLV	Overflow	256 reference unit	1	32767	1024	
	Cn-1F	SPEED1	1st speed (contact input speed control)	r/min	0	Maximum speed	100	
	Cn-20	SPEED2	2nd speed (contact input speed control)	r/min	0	Maximum speed	200	
	Cn-21	SPEED3	3rd speed (contact input speed control)	r/min	0	Maximum speed	300	
	Cn-28	NFBCC	Speed loop compensation constant	···	0	100	0	
	Cn-29	AXISNO	Axis address	···	0	14	0	

Notes :
1. After changing the setting, always turn the power OFF, then ON. This makes the new setting valid.
2. Automatically set by auto tuning function
3. The following restriction applies to electronic gear ratio (Cn-24 and Cn-25) :

$$0.01 \leqq \frac{B\ (Cn\text{-}24)}{A\ (Cn\text{-}25)} \leqq 100$$

4. The soft-start function is valid during the jog operation or when the contact input speed control mode is selected. The function is invalid during pulse command operations.

Table 3.6 Type SGDE User Constants List

User Constant No.	Code	Name	Unit	Lower Limit	Upper Limit	Factory Setting	Remarks
Cn-04	LOOPHZ	Speed loop gain	Hz	1	2000	80	
Cn-05	PITIME	Speed loop integration time constant	ms	2	10000	20	
Cn-12	BRKTIM	Time delay from brake reference until servo OFF	10 ms	0	50	0	
Cn-17	TRQFIL	Torque reference filter time constant	100 μ s	0	250	4	
Cn-1A	POSGN	Position loop gain	1/s	1	200	40	
Cn-1B	COINLV	Positioning complete range	Reference Unit	0	250	7	
Cn-24	RATB	Electric gear ratio (numerator)		1	65535	4	Note
Cn-25	RATA	Electric gear ratio (denominator)		1	65535	1	Note
Cn-26	ACCTME	Position reference acceleration/ deceleration time constant	100 μ s	0	640	0	

Note : $0.01 \leqq \frac{\text{B (Cn-24)}}{\text{A (Cn-25)}} \leqq 100$

Table 3.7 Type SGDB User Constants List

	User Constant No.	Code	Name	Unit	Lower Limit	Upper Limit	Factory Setting	Remarks
Basic Constants	Cn-11	PULSNO	Number of encoder pulses	P/R	513	32768	*Note 4	*Note 1
	Cn-2B	CTLSEL	Control method selection	*Note 4	0	11	0	*Note 1
	Cn-2A	MTRSEL	Motor selection	*Note 4	0	254	*Note 4	*Note 1
Gain Related Constants	Cn-03	VREFGN	Speed reference adjustment gain	(r/min)/V	10	2000	*Note 4	
	Cn-04	LOOPHZ	Speed loop gain	Hz	1	2000	80	*Note 2
	Cn-05	PITIME	Speed loop integration time constant	0.01 ms	200	51200	2000	*Note 2
	Cn-1A	POSGN	Position loop gain	1/s	1	1000	40	*Note 2
	Cn-1C	BIASLV	Bias	r/min	0	450	0	
	Cn-1D	FFGN	Feed-forward	%	0	100	0	
	Cn-17	TRQFIL	Torque reference filter time constant	0.1 ms	0	250	*5	
	Cn-28	NFBCC	Speed loop compensation constant	...	0	100	0	
	Cn-0C	TRQMSW	Mode switch torque reference	%	0	800	200	
	Cn-0D	REFMSW	Mode switch speed reference	r/min	0	10000	0	
	Cn-0E	ACCMSW	Mode switch acceleration	10 r/min/s	0	3000	0	
	Cn-0F	ERPMSW	Mode switch error pulse	reference unit	0	10000	0	*Note 1
Reference Related Constants	Cn-0A	PGRAT	PG dividing ratio	P/R	16	32768	*Note 4	*Note 1
	Cn-24	RATB	Electronic gear ratio (numerator)	...	1	65535	4	*Note 3
	Cn-25	RATA	Electronic gear ratio (denominator)	...	1	65535	1	*Note 3
	Cn-07	SFSACC	Soft start time (acceleration)	ms	0	10000	0	
	Cn-23	SFSDEC	Soft start time (deceleration)	ms	0	10000	0	
	Cn-26	ACCTME	Position reference acceleration/ deceleration constant	0.1 ms	0	640	0	
	Cn-27	FFFILT	Feed-forward filter	0.1 ms	0	640	0	
Torque Related Constants	Cn-08	TLMTF	Forward rotation torque limit	%	0	800	800	
	Cn-09	TLMTR	Reverse rotation torque limit	%	0	800	800	
	Cn-18	CLMIF	Forward external current limit	%	0	800	100	
	Cn-19	CLMIR	Reverse external current limit	%	0	800	100	

Table 3.7 Type SGDB User Constants List (Cont'd)

Category	User Constant No.	Code	Name	Unit	Lower Limit	Upper Limit	Factory Setting	Remarks
Torque Related Constants	Cn-06	EMGTRQ	Emergency stop torque	%	0	800	800	
	Cn-13	TCRFGN	Torque reference gain	0.1 V/ 100%	10	100	30	
	Cn-14	TCRLMT	Speed limit for torque control	r/min	0	10000	10000	
Sequency Related Constants	Cn-2D	OUTSEL	Output signal selection		110	666	210	
	Cn-0B	TGONLV	Zero-speed level	r/min	1	10000	20	
	Cn-29	ZCLVL	Zero clamp level	r/min	0	10000	10	
	Cn-22	VCMPLV	Speed coincidence signal output range	r/min	0	100	10	
	Cn-1B	COINLV	Positioning completion range	reference unit	0	250	7	
	Cn-1E	OVERLV	Overflow	256 reference unit	1	32767	1024	
	Cn-12	BRKTIM	Time delay from brake reference until servo OFF	10 ms	0	50	0	
	Cn-15	BRKSPD	Speed level for brake reference output during motor operation	r/min	0	10000	100	
	Cn-16	BRKWAI	Output timing of brake reference during motor operation	10 ms	10	100	50	
Other Constants	Cn-10	JOGSPD	Jog speed	r/min	0	10000	500	
	Cn-1F	SPEED1	1st speed (contact input speed control)	r/min	0	10000	100	
	Cn-20	SPEED2	2nd speed (contact input speed control)	r/min	0	10000	200	
	Cn-21	SPEED3	3rd speed (contact input speed control)	r/min	0	10000	300	
	Cn-2C	PGPWR	PG power supply voltage change	0.1 mV	52000	58000	52500	

▒▒ : User constants that must be set.

Notes :

1. After changing the setting, always turn the power OFF, then ON. This makes the new setting valid.
2. Automatically set by auto tuning function.
3. To use soft start function, always set both Cn-07 and Cn-23.
4. Refer to the next page.
5. 6.0kW or less : 4, 7.5kW : 8, 11.0 to 15.0kW : 16

Note 4 : Control method selection (Cn-2B) setting values

Setting value	Control method
0	Speed control (analog reference)
1	Position control (pulse train reference)
2	Torque control (analog reference)
3	Speed control (contact reference) ↔ Speed control (0 reference)
4	Speed control (contact reference) ↔ Speed control (analog reference)
5	Speed control (contact reference) ↔ Position control (pulse train reference)
6	Speed control (contact reference) ↔ Torque control (analog reference)
7	Position control (pulse train reference) ↔ Speed control (analog reference)
8	Position control (pulse train reference) ↔ Torque control (analog reference)
9	Torque control (analog reference) ↔ Speed control (analog reference)
10	Speed control (analog reference) ↔ Zero clamp control
11	Position control (pulse train reference) ↔ Position control (inhibit)

· Outputs signal selection (CN-2D) setting values
Selects which function of signal sent to output signal of 1CN.

1st decimal digit	to select function of CN-25, 26 ($\overline{\text{COIN}}$/$\overline{\text{V-CMP}}$)
2nd decimal digit	to select function of CN-27, 28 ($\overline{\text{TGON}}$)
3rd decimal digit	to select function of CN-29, 30 ($\overline{\text{S-RDY}}$)

Setting value	Function
0	$\overline{\text{COIN}}$/$\overline{\text{V-CMP}}$ (only assigned to 1CN-25, 26)
1	$\overline{\text{TGON}}$
2	$\overline{\text{S-RDY}}$
3	$\overline{\text{CLT}}$
4	$\overline{\text{BK}}$
5	OL warning
6	OL alarm

• Setting prior to shipping

SERVOPACK Type	Motor Type	Cn-2A	Cn-11 Cn-0A	Cn-03
SGDB-05ADG	SGMG-05A∗A	142	8192	250
SGDB-10ADG	SGMG-09A∗A	143		
SGDB-15ADG	SGMG-13A∗A	144		
SGDB-20ADG	SGMG-20A∗A	145		
SGDB-30ADG	SGMG-30A∗A	146		
SGDB-44ADG	SGMG-44A∗A	147		
SGDB-60ADG	SGMG-55A∗A	148		
SGDB-75ADG	SGMG-75A∗A	149		
SGDB-1AADG	SGMG-1AA∗A	140		
SGDB-1EADG	SGMG-1EA∗A	150		
SGDB-03ADM	SGMG-03A∗B	171	8192	167
SGDB-07ADM	SGMG-06A∗B	172		
SGDB-10ADM	SGMG-09A∗B	173		
SGDB-15ADM	SGMG-12A∗B	174		
SGDB-20ADM	SGMG-20A∗B	175		
SGDB-30ADM	SGMG-30A∗B	176		
SGDB-44ADM	SGMG-44A∗B	177		
SGDB-60ADM	SGMG-60A∗B	178		
SGDB-10ADS	SGMS-10A∗A	163	4096	500
SGDB-15ADS	SGMS-15A∗A	164		
SGDB-20ADS	SGMS-20A∗A	165		
SGDB-30ADS	SGMS-30A∗A	166		
SGDB-44ADS	SGMS-40A∗A	167		
SGDB-50ADS	SGMS-50A∗A	168		
SGDB-30ADD	SGMD-22A∗A	155	1024	333
SGDB-44ADD	SGMD-32A∗A	156		
SGDB-50ADD	SGMD-40A∗A	157		
SGDB-05AD	SGM-04A	106	2048	500
SGDB-10AD	SGM-08A	107		
SGDB-05ADP	SGMP-04A	126		
SGDB-10ADP	SGMP-08A	127		
SGDB-15ADP	SGMP-15A	128		

Table 3.8 Type DR2 User Constants List

Category	User Constant No.	Code	Name	Unit	Lower Limit	Upper Limit	Factory Setting	Remarks
	Cn-00	Not a user constant. (Cn-00 is used to select special mode for digital operator.)						
	Cn-01	Memory switch (see on page 474.)						See note 1
	Cn-02	Memory switch (see on page 476.)						See note 1
Gain Related Constants	Cn-04	LOOPHS	Speed loop gain	Hz	1	2000	80	See note 2
	Cn-05	PITIME	Speed loop integration time constant	0.01ms	2	10000	2000	See note 2
	Cn-1A	POSGN	Position loop gain	1/s	1	500	40	See note 2
	Cn-1C	BIASLV	Bias	r/min	0	450	0	
	Cn-1D	FFGN	Feed-forward	%	0	100	0	
	Cn-26	ACCTME	Position reference acceleration/ deceleration time constant	100 μs	0	640	0	
	Cn-27	FFFILT	Feed-forward reference filter	100 μs	0	640	0	
Torque Related Constants	Cn-06	EMGTRQ	Emergency stop torque	%	0	Max. torque	Max. torque	
	Cn-08	TLMTF	Forward rotation torque limit	%	0	Max. torque	Max. torque	
	Cn-09	TLMTR	Reverse rotation torque limit	%	0	Max. torque	Max. torque	
	Cn-17	TRQFIL	Torque reference filter time constant	100 μs	0	250	4	
	Cn-18	CLMIF	Forward external torque limit	%	0	Max. torque	100	
	Cn-19	CLMIR	Reverse external torque limit	%	0	Max. torque	100	
Sequence Related Constants	Cn-0B	TGONLV	Zero-speed level	r/min	1	4500	20	
	Cn-12	BRKTIM	Time delay from brake reference until servo OFF	10 ms	0	50	0	
	Cn-15	BRKSPD	Speed level for brake reference output during motor operation	r/min	0	4500	100	

Table 3.8 Type DR2 User Constants List

Category	User Constant No.	Code	Name	Unit	Lower Limit	Upper Limit	Factory Setting	Remarks
Sequence Related Constants	Cn-16	BRKWAI	Output timing of brake reference during motor operation	10 ms	10	100	50	
	Cn-1B	COINLV	Positioning complete range	Reference unit	0	250	7	
Pulse Related Constants	Cn-0A	PGRAT	Dividing ratio setting	P/R	16	32768	2048	See note 1
	Cn-11	PULSNO	Number of encoder pulses	P/R	513	32768	2048	See note 1
	Cn-24	RATB	Electronic gear ratio (numerator)		1	65535	4	See note 3
	Cn-25	RATA	Electronic gear ratio (denominator)		1	65535	1	See note 3
	Cn-2A	PULSN02	External PG number of pulses	P/R	513	32768	2048	
Other Constants	Cn-0C	TRQMSW	Mode switch (torque reference)	%	0	Max. torque	200	
	Cn-0D	REFMSW	Mode switch (speed reference)	r/min	0	4500	0	
	Cn-0E	ACCMSW	Mode switch (acceleration reference)	10(r/min)/s	0	3000	0	
	Cn-0F	ERPMSW	Mode switch (error pulse)	Reference unit	0	10000	0	
	Cn-10	JOGSPD	Jog speed	r/min	0	4500	500	
	Cn-1E	OVERLV	Overflow	×256 reference unit	1	32767	1024	
	Cn-1F	SPEED1	1st speed (contact input speed control)	r/min	0	4500	100	See note 4
	Cn-20	SPEED2	2nd speed (contact input speed control)	r/min	0	4500	200	
	Cn-21	SPEED3	3rd speed (contact input speed control)	r/min	0	4500	300	
	Cn-28	NFBCC	Speed loop compensation constant	···	0	100	0	

Notes :

1) After changing the setting, always turn the power OFF, then ON. This makes the new setting valid.

2) Automatically set by autotuning function.

3) The following restriction applies to electronic gear ratio (Cn-24 and Cn-25) :

$$0.01 \leqq \frac{\text{B (Cn-24)}}{\text{A (Cn-25)}} \leqq 100$$

4) For user constant Cn-1E, when full-closed loop specification, factory setting is 1.

3.4.2 User Constant (Memory Switch) Setup and Monitor (Cn-01 to Cn-02)

Memory switches Cn-01 and Cn-02 can be set up or monitored as memory switch bits. The procedures for item number setup and data display are the same as indicated in Par.3.4.1 **1** and **2** .

Panel Display

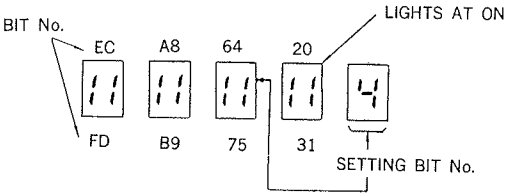

Fig. 3.5 Bit Data Display

1 With the (<) or (>) key, enter the setup memory switch bit No. at the far right end of the panel.

2 With the (∧) key, set the memory switch to ON or OFF (either (∧) or (∨) can be used). The panel indication comes on when the switch is ON, and goes off when the switch is OFF.

3 Repeat steps **1** and **2** as needed.

4 Retain the data with the DSPL/SET key.

5 With the DATA/ENTER key, return to the item No. display status.

6 Using the DSPL/SET key, switch from the setting mode to the monitor mode.

Table 3.9, 3.11, 3.13, 3.15, and 3.17 show memory switches of user constant Cn-01, and Table 3.10, 3.12, 3.14, 3.16 and 3.18 those of user constant Cn-02.

Note : When the setting of user constants Cn-01 and Cn-02 are changed, turn OFF the power supply once and restart the operation.

Table 3.9 Type SGD User Constants Cn-01 (Memory Switch)

Selection	Bit No.	Setting	Conditions	Standard
Sequence Input Selection	0	0	Servo ON / OFF by external input (SV-ON).	0
		1	The servo is ON at all times.	
	1		Do not adjust.	0
	2	0	The P-OT signal prohibits forward running.	0
		1	Forward running is permitted at all times.	
	3	0	The N-OT signal permits reverse running.	0
		1	Reverse running is permitted at all times.	
Sequence Output Signal Changeover (TGON)	4	0	$\overline{\text{TGON}}$ signal is used as a signal output when rotating is detected. ($\overline{\text{TGON}}$)	0
		1	$\overline{\text{TGON}}$ signal is used as a signal when current limit is detected.	
Treatment of Momentary Power Loss Reset	5	0	Maintains the servo alarm status at momentary power loss reset.	0
		1	Releases the servo alarm status automatically at momentary power loss reset.	
Abnormal Stop Selection	6	0	<DB stop> The dynamic brake stops the motor.	0
		1	<Coasting to a stop> The motor is freed and brought to a stop.	
	7	0	<DB OFF after DB stop> The dynamic brake is turned OFF after the motor is stopped.	1
		1	<DB continuously ON after DB stop> The dynamic brake remains activated after the motor is stopped.	
	8	0	The overtravel state stop method agrees with bit 6.	0
		1	<Overtravel zero speed stop> In the overtravel state, the motor is stopped at the torque setting defined by user constant Cn-06.	
	Note 1 9	0	In the overtravel state, base blocking (BB) is implemented after zero speed stop.	0
		1	In the overtravel state, zero clamping is effected after zero speed stop.	
Position Deviation at Base Blocking	A	0	Clears.	0
		1	Does not clear.	
Mode Switch Function	B	0	The mode switch function is provided. The mode switch operation agrees with bit C and D.	0
		1	The mode switch function is not provided.	
Mode Switch Selection	Note 2 D・C	0・0	<Torque reference> Based on the torque reference level defined by user constant Cn-0C.	00
		0・1	<Speed reference> Based on the speed reference level defined by user constant Cn-0D.	
		1・0	<Acceleration> Based on the acceleration level defined by user constant Cn-0E.	
		1・1	<Deviation pulse> Based on the deviation pulse level defined by user constant Cn-0F.	
Encoder Selection	E	0	Incremental encoder	0
		1	Absolute encoder	
Spare	F		Do not change.	0

Notes: 1. Selects the state prevailing when the zero speed stop method has been selected for the overtravel state (bit 8).
2. Selects the mode switch operating condition. When the mode switch operates, the speed control mode changes from P•I control to P control.

Table 3.10 Type SGD User Constants Cn-02 (Memory Switch)

Selection	Bit No.	Setting	Description	Standard
Reverse Rotation Mode	0	0	CCW: Forward Running	0
		1	CW: Forward Running	
Home Position Error Mask	1 (ABSO. PG only)	0	Home position error is detected.	0
		1	Home position error is not detected.	
Contact Reference Mode	2	0	Contact inputs $\overline{\text{P-CL}}$ and $\overline{\text{N-CL}}$ are used as power supply limit ON/OFF reference inputs.	0
		1	Contact inputs $\overline{\text{P-CL}}$ and $\overline{\text{N-CL}}$ are used as speed input reference selection (1st to 3rd speed) signals.	
Reference Pulse Mode	3.4.5	000	Sign+Pulse	000
		001	CW+CCW	
		010	Phase-A+Phase-B(×1)	
		011	Phase-A+Phase-B(×2)	
		100	Phase-A+Phase-B(×4)	
Monitor Changeover (TRQ-M)	6	0	Torque monitor (0.5V/100%)	1
		1	Speed reference monitor (0.5V/1000 r/min)	
Monitor Changeover (VTG-M)	7	0	Speed monitor (0.5V/1000 r/min)	1
		1	Lag pulse monitor (3V/100 pulses)	
Spare	8.9		Do not adjust.	0
Deviation Counter Clear	A	0	Solid (High level signal)	0
		1	Differential (Rising edge)	
Spare	B		Do not adjust.	0
Spare	C		Do not adjust.	0
Reference Pulse Reversal	D	0	Normal operation	0
		1	Reverse operation	
Monitor Output Level Changeover	E	0	Changes the value of lag pulse monitor output level to 3V/100 reference unit.	0
		1	Changes the value of lag pulse monitor output level to 3V/10000 reference unit.	
Spare	F		Do not change.	

Table 3.11 Type SGDA User Constant Cn-01 (Memory Switch) List

	Bit No.	Setting		Factory Setting
Input signal enable/ disable	0	0 Uses servo ON input ($\overline{\text{S-ON}}$).	1 Does not use servo ON input (S-ON). Servo is always ON.	0
	1	Reserved (not to be set)		0
	2	0 Uses forward rotation prohibited input (P-OT).	1 Does not use forward rotation prohibited input (P-OT). Forward rotation is always possible.	0
	3	0 Uses reverse rotation prohibited input ($\overline{\text{N-OT}}$).	1 Does not use reverse rotation prohibited input ($\overline{\text{N-OT}}$). Reverse rotation is always possible.	0
TGON signal switching	4	0 Uses TGON signal (TGON) as running output.	1 Uses TGON signal (TGON) as torque limit output.	0
Operation performed at recovery from power loss	5	0 Remains in servo alarm status at recovery from power loss.	1 Automatically resets servo alarm status at recovery from power loss.	0
Sequence selection at alarm condition	6	0 Stops the motor by applying dynamic brake when an alarm arises.	1 Causes the motor to coast to a stop when an alarm arises.	0
	7	0 When an alarm arises, stops the motor by applying dynamic brake and then releases dynamic brake.	1 When an alarm arises, stops the motor by applying dynamic brake but does not release dynamic brake.	1
	8	0 Stops the motor according to bit 6 setting when overtravel is detected (P-OT, N-OT).	1 Decelerates the motor to a stop by applying the torque specified in Cn-06 when overtravel is detected (P-OT, N-OT).	0
	9	0 When overtravel is detected (P-OT, N-OT), decelerates the motor to a stop by applying the torque specified in Cn-06 and then turns the servo OFF.	1 When overtravel is detected (P-OT, N-OT), decelerates the motor to a stop by applying the torque specified in Cn-06 and then performs zero-clamp.	0

Table 3.11 Type SGDA User Constant Cn-01 (Memory Switch) List (Cont'd)

	Bit No.	Setting				Factory Setting
Operation performed at servo OFF	A	0		1		0
		Clears error pulse when servo is turned OFF.		Does not clear error pulse when servo is turned OFF.		
	B	0		1		0
		Uses mode switch function as set in bits D and C of Cn-01.		Does not use mode switch function.		
Mode switch selection	D • C	0 • 0	0 • 1	1 • 0	1 • 1	0 • 0
		Uses internal torque reference as a condition. (Level setting : Cn-0C)	Uses speed reference as a condition. (Level setting : Cn-0D)	Uses acceleration as a condition. (Level setting : Cn-0E)	Uses error pulse as a condition. (Level setting : Cn-0F)	
Encoder selection	E	0		1		0
		Uses incremental encoder.		Uses absolute encoder.		
Internal speed selection "Note 1"	F	0		1		0
		Stops the motor when both contact signals $\overline{\text{P-CL}}$ and $\overline{\text{N-CL}}$ are OFF.		Receives pulse reference when both contact signals $\overline{\text{P-CL}}$ and $\overline{\text{N-CL}}$ are OFF.		
INHIBIT function		0		1		
		Always receives pulse reference.		Enables INHIBIT function.		

Table 3.12 Type SGDA User Constant Cn-02 (Memory Switch) List

	Bit No.	Setting					Factory Setting
Rotation direction selection	0	0			1		0
		Defines counterclockwise (CCW) rotation as forward rotation.			Defines clockwise (CW) rotation as forward rotation (reverse rotation mode).		
Home position error processing selection	1	0			1		0
		Detects home position error (when absolute encoder is used).			Does not detect home position error.		
Contact input speed control	2	0			1		0
		Does not use contact input speed control.			Uses contact input speed control.		
Reference pulse form selection	5•4•3	0 • 0 • 0	0 • 0 • 1	0 • 1 • 0	0 • 1 • 1	1 • 0 • 0	0•0•0
		Sign+ Pulse	CW+ CCW	Phase A+ Phase B (×1 multiplication)	Phase A+ Phase B (×2 multiplication)	Phase A+ Phase B (×4 multiplication)	
Reserved	7•6	Reserved (not to be used)					0
Motor selection	8	0			1		Note 2
		SGM motor			SGMP motor		
Error counter clear signal	A	0			1		0
		Clears the error counter when an error counter clear signal is at high level.			Clears the error counter when the leading edge of an error counter clear signal rises.		
Integration time constant setting unit	B	0			1		0
		1 ms			0.01 ms		
Torque reference filter	C	0			1		0
		Primary			Secondary		
Reference pulse logic	D	0			1		0
		Does not invert reference pulse logic.			Inverts reference pulse logic.		
Others	E	0			1		0
		Displays position error Un-08 in×1 reference units while in monitor mode.			Displays position error Un-08 in×100 reference units while monitor mode.		
	F	0			1		0
		Line driver (Maximum reference pulse frequency : 450kpps)			Open collector (Maximum reference pulse frequency : 200 kpps)		

▨ : User constants that must be always set

NOTE For the Cn-01 and Cn-02 memory switches, always turn the power OFF and then ON after changing the setting. This makes the new setting valid.

Notes :

1. Internal speed selection is valid only when bit 2 of Cn-02 is set to "1."
2. The factory setting depends on the Servopack type as shown below.

SERVOPACK Type	Factory Setting
SGDA-□□□P	0
SGDA-□□□PP	1

Table 3.13 Type SGDE User Constant Cn-01 (Memory Switch) List

	Bit No.	Setting	Conditions	Standard
Input Signal Enable/ Disable	0	0	Uses servo ON input ($\overline{\text{S-ON}}$).	0
		1	The servo is ON at all times.	
	2	0	Uses forward rotation prohibited input ($\overline{\text{P-OT}}$).	0
		1	Forward running is permitted at all times.	
	3	0	Uses reverse rotation prohibited input ($\overline{\text{N-OT}}$).	0
		1	Reverse running is permitted at all times.	
Abnormal Stop Selection	8	0	In the overtravel state, the dynamic brake stops the motor.	0
		1	In the overtravel state, MAX torque stops the motor.	
Position Deviation at Base Block	A	0	Deviation counter cleared.	0
		1	Deviation counter not cleared.	

Table 3.14 Type SGDE User Constant Cn-02 (Memory Switch) List

Selection	Bit No.	Setting	Conditions	Standard
Reverse Rotation Mode	0	0	CCW : Forward Running	0
		1	CW : Forward Running	
Reference Pulse Form	5•4•3	0•0•0	Sign+Pulse	0•0•0
		0•0•1	CW+CCW	
		0•1•0	A-phase+B-phase (×1 multiplication)	
		0•1•1	A-phase+B-phase (×2 multiplication)	
		1•0•0	A-phase+B-phase (×4 multiplication)	
Error Counter Clear Signal	A	0	Clears the error counter when an error counter clear signal is at high level.	0
		1	Clears the error counter on the rising edge of an error counter clear signal.	
Torque Reference Filter	C*	0	Primary	0
		1	Secondary	
Others	E	0	Displays position error Un-08 in×1 reference units while in monitor mode.	0
		1	Displays position error Un-08 in×100 reference units while in monitor mode.	

* Setting can be changed at software versions 4 or above.

Note : For the Cn-01 and Cn-02 memory switch, always turn the power OFF and then ON after the setting is changed. This makes the new setting valid.

Table 3.15 Type SGDB User Constant Cn-01 (Memory Switch) List

	Bit No.	Setting				Factory Setting
Input signal enable/disable	0	0 Uses servo ON input (S-ON).		1 Does not use servo ON input (S-ON). Servo is always ON.		0
	1	0 Uses SEN signal input (SEN) when absolute encoder is used.		1 Does not use SEN signal input (SEN) when absolute encoder is used. Servopack automatically treats signal voltage as high level.		0
	2	0 Uses forward rotation prohibited input (P-OT).		1 Does not use forward rotation prohibited input (P-OT). Forward rotation is always possible.		0
	3	0 Uses reverse rotation prohibited input (N-OT).		1 Does not use reverse rotation prohibited input (N-OT). Reverse rotation is always possible.		0
Reserved	4	Reserved : Setting=0 (do not change the setting)				0
Operation performed at recovery from power loss	5	0 Resets servo alarm status at power recovery from its momentary power loss.		1 Remains in servo alarm status at power recovery from momentary power loss.		0
Sequence selection at alarm condition	6	0 Stops the motor by applying dynamic brake (DB) at base block.		1 Makes the motor coast to a stop at base block.		0
	7	0 At base block, stops the motor by applying dynamic brake (DB) and then release DB.		1 At base block, stops the motor by applying dynamic brake (DB) but does not release DB.		Note 1
	8	0 Stops the motor according to bit 6 setting when overtravel is detected (P-OT, N-OT).		1 Decelerates the motor to a stop by applying the torque specified in Cn-06 when overtravel is detected (P-OT, N-OT).		0
	9	0 When overtravel is detected (P-OT, N-OT), decelerates the motor to a stop by applying the torque specified in Cn-06 and then performs Servo OFF.		1 When overtravel is detected (P-OT, N-OT), decelerates the motor to a stop by applying the torque specified in Cn-06 and then turns the zero-clamp.		0
Process selection for Servo OFF	A	0 Clears error pulse at Servo OFF		1 Does not clear error pulse at Servo OFF		0
Mode switch selection	B	0 Uses mode switch function. Follows Cn-01 bits D, C		1 Does not use mode switch function.		0
	D • C	0 • 0 Uses internal torque reference as a condition (Level setting : Cn-0C)	0 • 1 Uses speed reference as a condition (Level setting : Cn-0D)	1 • 0 Uses acceleration as a condition (Level setting : Cn-0E)	1 • 1 Uses error pulse as a condition (Level setting : Cn-0E)	0 • 0

Table 3.15 Type SGDB User Constant Cn-01 (Memory Switch) List (Cont'd)

	Bit No.	Setting		Factory Setting
Encoder selection	E	0	1	Note 2
		Uses incremental encoder.	Uses absolute encoder.	
Reserved	F	Reserved : Setting=0 (do not change the setting)		0

: User constants must be set and checked before turning the motor power ON.

Notes : 1. Less than or equal to 1.5 kW : 1 Greater than or equal to 2.0 kW : 0
2. If Applicable motor is type SGMG, SGMS, SGM, SGMP : 0 Type SGMD : 1
3. For the Cn-01 memory switch, always turn the power OFF, then ON after the changing the setting. This makes the new setting valid.

Table 3.16 Type SGDB User Constant Cn-02 (Memory Switch) List

	Bit No.	Setting					Factory Setting
Rotation direction selection	0	0 Defines counterclockwise (CCW) rotation as forward rotation.			1 Defines clockwise (CW) rotation as forward rotation (reverse rotation mode).		0
Home position error processing selection	1	0 Detects home position error (when absolute encoder is used).			1 Does not detect home position error.		0
Analog speed limit function	2	0 Does not use analog speed limit function			1 Uses analog speed limit function		0
Reference pulse form	5•4•3	0 • 0 • 0 Sign+Pulse	0 • 0 • 1 CW+CCW	0 • 0 • 1 A-phase+ B-phase (×1 multiplication)	0 • 1 • 1 A-phase+ B-phase (×2 multiplication)	1 • 0 • 0 A-phase+ B-phase (×4 multiplication)	0•0•0
Analog monitor selection	6	0 Outputs torque to TRQ-M			1 Outputs reference speed to TRQ-M		0
Analog current limit function	7	0 Outputs speed to VTG-M			1 Outputs position error to VTG-M		0
Torque feed-forward function	8	0 Does not use analog current limit function			1 Uses analog current limit function		0
Clear signal	9	0 Does not use torque feed-forward function			1 Uses torque feed-forward function		0
Reserved	A	0 Clears the error counter when an error counter clear signal is at high level			1 Clears the error counter on the rising edge of an error counter clear signal		0
Torque filter	B	Reserved : Setting=0 (do not change the setting)					0
Reference pulse form	C	0 Uses torque filter as primary filter			1 Uses torque filter as secondary filter		Note 2
Position error monitor	D	0 Does not invert reference pulse logic			1 Inverts reference pulse logic		0
Reference pulse filter	E	0 Displays position error in×1 reference units while in monitor mode			1 Displays position error in×100 reference units while in monitor mode		0
	F	0 Selects filter time constant 'small'. (450 kpps max)			1 Selects filter time constant 'large'. (200 kpps max)		0

Notes : 1. For the Cn-02 memory switch, always turn the power OFF, then ON after changing the setting. This makes the new setting valid. However, bits 6, 7, E become valid immediately after setting

2. 6.0 kW or less : 0, 6.0 kW or more : 1

Table 3.17 Type DR2 User Constant Cn-01 (Memory Switch) List

	Bit No.	Setting		Factory Setting
Input signal enable/ disable	0	0 Uses servo ON input ($\overline{\text{S-ON}}$).	1 Does not use servo ON input ($\overline{\text{S-ON}}$). Servo is always ON.	0
	1	0 When absolute encoder is used, uses the SEN input signal (SEN).	1 When absolute encoder is used, masks the SEN signal. Automatically regarded as High level inside the Servopack.	0
Input signal enable/ disable	2	0 Uses forward rotation prohibited input (P-OT).	1 Does not use forward rotation prohibited input (P-OT). Forward rotation is always possible.	0
	3	0 Uses reverse rotation prohibited input ($\overline{\text{N-OT}}$).	1 Does not use reverse rotation prohibited input ($\overline{\text{N-OT}}$). Reverse rotation is always possible.	0
—	4	Not used.	Not used.	0 See note 3
—	5	Not used.	Not used.	0
Sequence selection at alarm condition	6	0 Stops the motor by applying dynamic brake when an alarm arises.	1 Causes the motor to coast to a stop when an alarm arises.	0
	7	0 When an alarm arises, stops the motor by applying dynamic brake and then releases dynamic brake.	1 When an alarm arises, stops the motor by applying dynamic brake but does not release dynamic brake.	1
	8	0 Stops the motor according to bit 6 setting when overtravel is detected (P-OT, N-OT).	1 Decelerates the motor to a stop by applying the torque specified in Cn-06 when overtravel is detected (P-OT, N-OT).	0
	9	0 When overtravel is detected (P-OT, N-OT), decelerates the motor to a stop by applying the torque specified in Cn-06 and then turns the servo OFF.	1 When overtravel is detected (P-OT, N-OT), decelerates the motor to a stop by applying the torque specified in Cn-06 and then performs zero-clamp.	0

Table 3.17 Type DR2 User Constant Cn-01 (Memory Switch) List (Cont'd)

	Bit No.	Setting				Factory Setting
Operation performed at servo OFF	A	0		1		0
		Clears error pulse when servo is turned OFF.		Does not clear error pulse when servo is turned OFF.		
	B	0		1		0
		Uses mode switch function as set in bits D and C of Cn-01.		Does not use mode switch function.		
Mode switch selection	D • C	0 • 0	0 • 1	1 • 0	1 • 1	0 • 0
		Uses internal torque reference as a condition. (Level setting : Cn-0C)	Uses speed reference as a condition. (Level setting : Cn-0D)	Uses acceleration as a condition. (Level setting : Cn-0E)	Uses error pulse as a condition. (Level setting : Cn-0F)	
TGON signal function switch	E	0		1		0
		Uses TGON signal as the motor running detection signal.		Uses TGON signal as the brake interlock signal.		
Contact input speed selection	F	0		1		0 See note 1
		Stops the motor when both contact signals P-CL and N-CL are OFF.		Receives pulse reference when both contact signals P-CL and N-CL are OFF.		
INHIBIT function		0		1		0
		Always receives pulse reference.		Enables INHIBIT function.		

□: User constants that must be always set

Notes :

1 Internal speed selection is valid only when bit 2 of Cn-02 is set to"1".

2 The factory setting depends on the Servopack type as shown below.

SERVOPACK Type	Factory Setting
DR2-□	0
DR2-□P	1

3 At full-closed loop specification, when Cn-01 bit 4 is set to 1, external PG phase-C disconnection error is not detected.

4 At full-closed loop specification, factory setting Cn-02 bit B is 1.

NOTE For the Cn-01 and Cn-02 memory switches, always turn the power OFF and then ON after changing the setting.This makes the new setting valid.

Table 3.18 Type DR2 User Constant Cn-02 (Memory Switch) List

	Bit No.	Setting					Factory Setting
Rotation direction selection	0	0			1		0
		Defines counterclockwise (CCW) rotation as forward rotation.			Defines clockwise (CW) rotation as forward rotation (reverse rotation mode).		
Home position error processing selection	1	0			1		0
		Detects home position error (when absolute encoder is used).			Does not detect home position error.		
Contact input speed control	2	0			1		0
		Does not use contact input speed control.			Uses contact input speed control.		
Reference pulse form selection	5・4・3	0・0・0	0・0・1	0・1・0	0・1・1	1・0・0	0・0・0
		Sign+ pulse	CW+CCW	Phase A+ Phase B (×1 multiplication)	Phase A+ Phase B (×2 multiplication)	Phase A+ Phase B (×4 multiplication)	
Reserved	7・6	Reserved (not to be used)					0
Motor selection	8	0			1		See note 2
		SGM motor			SGMP motor		
Encoder selection	9	0			1		0
		Incremental encoder			Absolute encoder		
Error counter clear signal	A	0			1		0
		Clears the error counter when an error counter clear signal is at high level.			Clears the error counter when the leading edge of an error counter clear signal rises.		
Selection of speed/torque or position control mode	B	0			1		0 See note 4
		Not used.			Position control mode		
Torque reference filter	C	0			1		0
		Primary			Secondary		
Reference pulse logic	D	0			1		0
		Does not invert reference pulse logic.			Inverts reference pulse logic.		
Position error monitor level	E	0			1		0
		Displays position error Un-08 in ×1 reference units while in monitor mode.			Displays position error Un-08 in ×100 reference units while in monitor mode.		
Reference pulse filter	F	0			1		0
		Line driver (Maximum reference pulse frequency : 450 kpps)			Open collector (Maximum reference pulse frequency : 200 kpps)		

▨ : User constants that must be always set

Notes :

1 Internal speed selection is valid only when bit 2 of Cn-02 is set to"1".

2 The factory setting depends on the Servopack type as shown below.

SERVOPACK Type	Factory Setting
DR2-□	0
DR2-□P	1

3 At full-closed loop specification, when Cn-01 bit 4 is set to 1, external PG phase-C disconnection error is not detected.

4 At full-closed loop specification, factory setting Cn-02 bit B is 1.

NOTE For the Cn-01 and Cn-02 memory switches, always turn the power OFF and then ON after changing the setting.This makes the new setting valid.

3.4.3 Digital Operator Jog Operation Mode Selection and Operating Procedure

(1) Digital Operator Jog Operation Mode Selection

When user constant Cn-00 is set to 00, the operations are to be controlled from the digital operator.

Panel Display

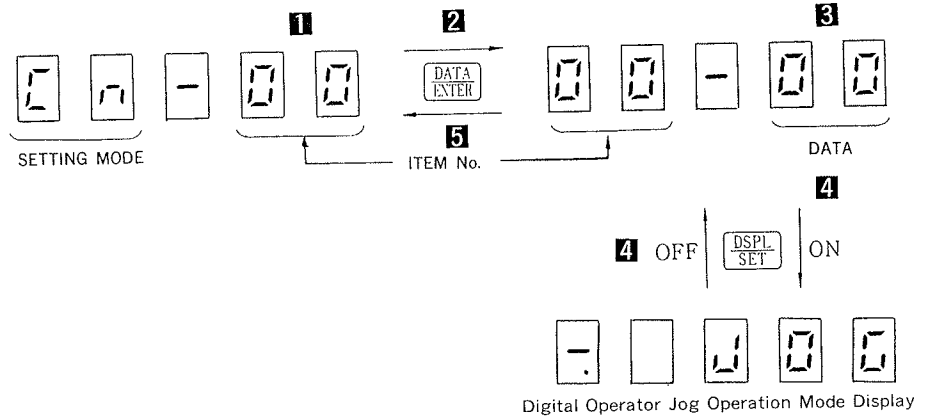

Fig. 3.6 Digital Operator Jog Operation Mode

1 Select the item number 00 with the (∧) , (∨) , (<) or (>) key.

2 With the DATA ENTER key, display the data related to the selected item number.

3 With the (∧) , (∨) , (<) or (>) key, select the number 00.

4 With the DSPL SET key, turn ON or OFF the monitor panel jog operation mode.

5 With the DATA ENTER key, return to the item No. display status.

6 Using the DSPL SET key, switch from the setting mode to the monitor mode.

(2) Digital Operator Jog Operation Procedure

For speed reference adjustment, use user constant Cn-10 (see Table 3.4).

1. With the (JOG SVON) switch, effect SVON / SVOFF changeover.
2. The motor runs in the forward direction while the (∧) key is held down.
3. The motor runs in the reverse direction while the (∨) key is held down.

3.4.4 Clearing Fault Traceback Data

When user constant Cn-00 is set to 02, fault traceback data are cleared.

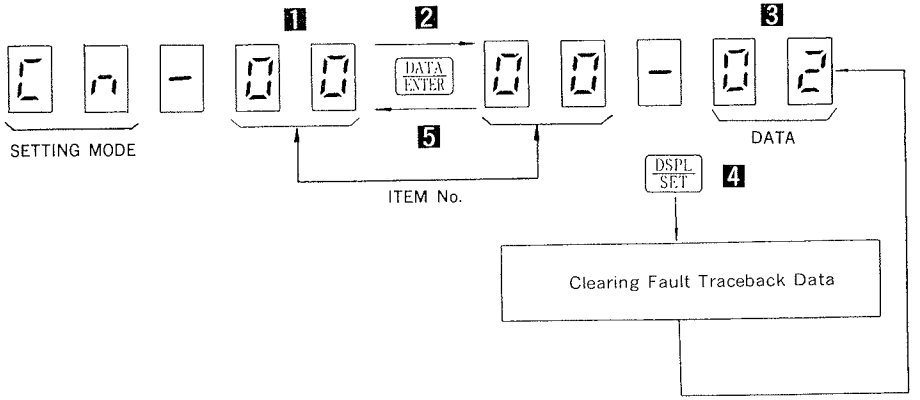

Fig.3.7 Clearing Fault Traceback Data

1 Select the item number 00 with the (∧) , (∨) , (<) or (>) key.

2 With the DATA ENTER key, display the data related to the selected item number.

3 With the (∧) , (∨) , (<) or (>) key, select the number 02.

4 With the DSPL SET key, clear fault traceback data and return to the user constant Cn-00 data display status.

5 With the DATA ENTER key, return to the item No. display status.

6 Using the DSPL SET key, switch from the setting mode to the monitor mode.

3.4.5 Check of Motor

(1) Check Method of Motor

When user constant Cn-00 is set to 04, the system enters the motor parameter check mode.

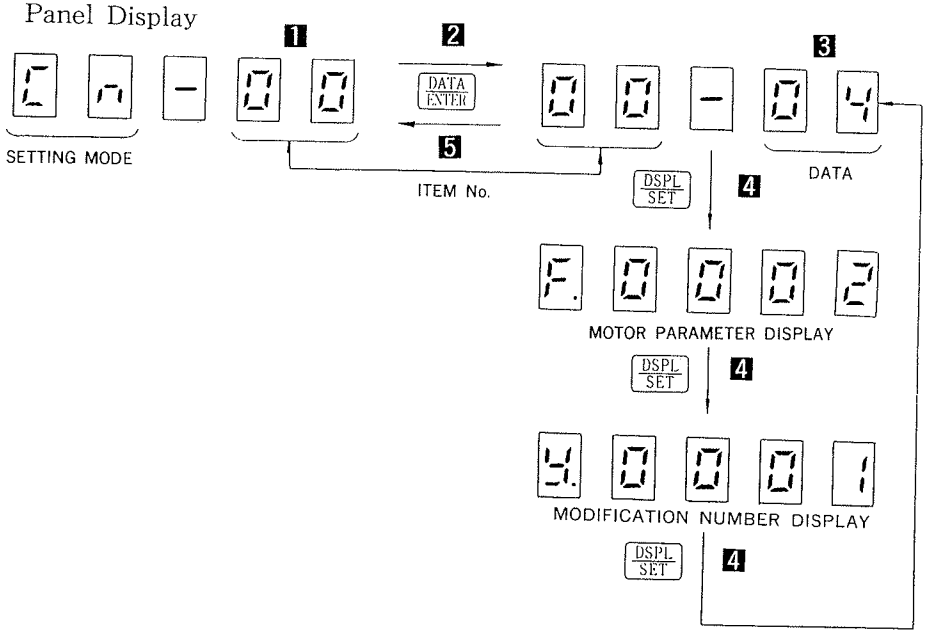

Fig. 3.8 Switch Functions in Motor Parameter Check

1. Set up item number 00 with the (∧), (∨), (<) or (>) key.
2. With the DATA ENTER key, display the data related to the selected item number.
3. With the (∧), (∨), (<) or (>) key, select the number 04.
4. With the DSPL SET key, check the motor parameter.
5. With the DATA ENTER key, return to the item No. display status.
6. Using the DSPL SET key, switch from the setting mode to the monitor mode.

(2) Parameter Display

Motor Parameter

Motor Capacity

SGD	SGDA SGDE DR2	SGDB
9E : 30W b2 : 50W 01 : 100W 02 : 200W 04 : 400W 08 : 750W	9E : 30W b2 : 50W 01 : 100W 02 : 200W 03 : 300W 04 : 400W 08 : 750W	05 : 300W 400W 450W 0A : 600W 750W 850W 900W 1kW 0F : 1.2kW 1.3kW 1.5kW 14 : 1.8kW 2.0kW 1E : 2.2kW 2.9kW 3.0kW 2C : 3.2kW 4.0kW 4.4kW 3C : 5.5kW 6.0kW 4B : 7.5kW 6E : 11.0kW

Motor Type

SGD	SGDA DR2	SGDE	SGDB
0 : SGM200V 1 : SGM100W	0 : SGM200V 1 : SGM100V 2 : SGMP200V 3 : SGMP100V	4 : SGME200V 5 : SGME100V	0 : ΣSeries

Modification Index

Modification No. (Hexadecimal display)

$(a \times 16^3 + b \times 16^2 + C \times 16 + d)$ = Y Specification No.

Nos. Corresponding to Alphabets

A = 10
b = 11
C = 12
d = 13
E = 14
F = 15

3.4.6 Auto Tuning

(1) Mode Setting in Auto Tuning

When user constant Cn-00 is set to 05, the system enters the auto tuning mode.

Panel Display

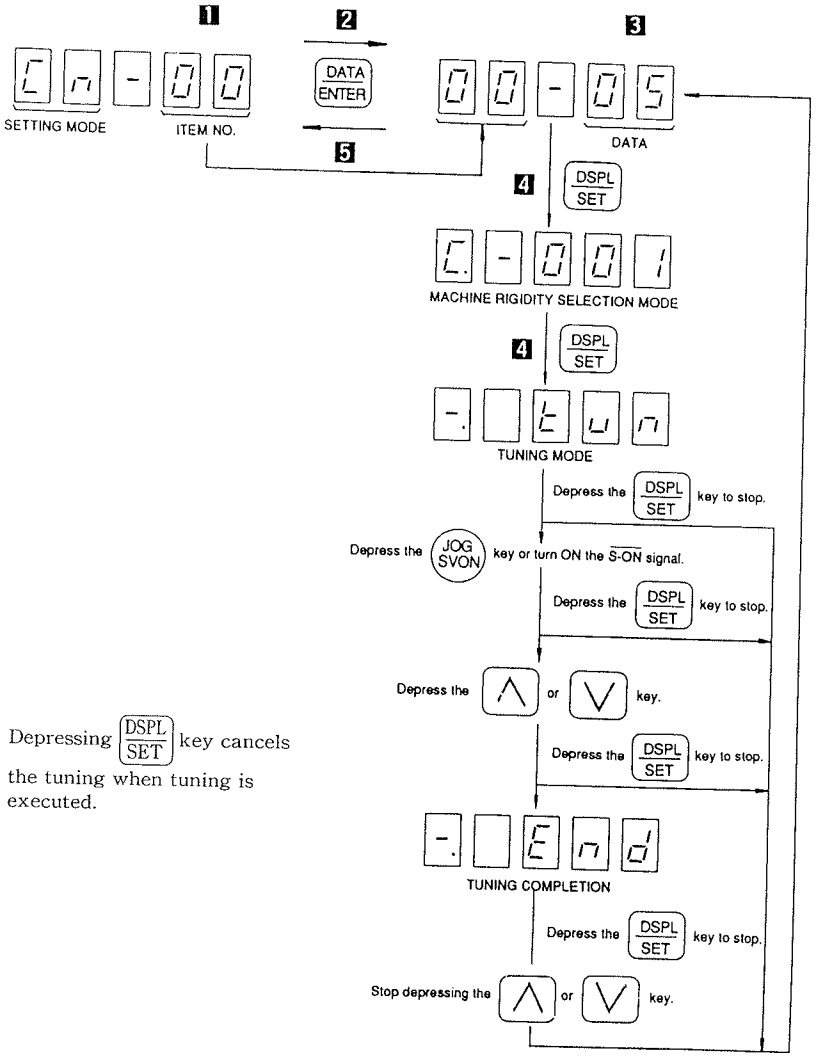

Note : Depressing DSPL SET key cancels the tuning when tuning is executed.

Fig. 8A.9 Auto Tuning Mode

1. Set up item number 00 with the (∧) , (∨) , (<) or (>) key.
2. With the DATA/ENTER key, display the data related to the selected item number.
3. With the (∧) , (∨) , (<) or (>) key, select the number 05.
4. With the DSPL/SET key, switch to the machine rigidity selection mode or tuning mode.
5. With the DATA/ENTER key, return to the item No. display status.
6. Using the DSPL/SET key, swich from the setting mode to the monitor mode.

(2) Tuning Method

(a) Speed setting
When tuning is being performed, the maximum value of speed reference is set by user constant Cn-10. Set the value to approximately 500 r/min. (If the value is too small, auto tuning cannot be performed properly.)
The motor runs intermittently when the (∧) or (∨) key is held down. (The motor does not run at the same speed continuously.)

(b) Machine rigidity selection
According to the machine rigidity, select the following :
C-001 : Low response
C-002 : Medium response
C-003 : High response
When the machine rigidity is not defined, select the middle-speed response.

· Machine vibration
When entering the servo ON status with the JOG/SVON switch or machine vibrates suddenly at depressing the (∧) or (∨) key, depress the DSPL/SET key and stop the tuning operation.
Then depress the DSPL/SET key to enter the machine rigidity selection mode, and set the level of machine rigidity selection at one level lower.

· When tuning is not completed
When tuning is not completed even though the machine does not vibrate, depress the DSPL/SET key to stop the tuning operation.
Then depress the DSPL/SET key to enter the machine rigidity selection mode and set the level of machine rigidity selection at one level higher.

(c) Tuning

1 With the JOG/SVON switch, effect SVON/SVOFF changeover.
2 The motor runs in the forward direction while the ∧ key is held down.
3 The motor runs in the reverse direction while the ∨ key is held down.

Note : If the machine vibrates when depressing the ∧ or ∨ key, stop depressing the ∧ or ∨ key since the gain is decreased.

4 With the tuning completion, [-.][E][n][d] is displayed and power supply to the motor is stopped.
Stop depressing the ∧ or ∨ key. Display is returned to [0][0][-][0][5].

(d) Input signals

- The P-OT signal, N-OT signal and SEN signal (absolute encoder only) are enabled during auto tuning. Input the P-OT signal, N-OT signal and SEN signal (absolute encoder only) during auto tuning. To conduct auto tuning without inputting these signals, set user constant Cn-01 Bits 1, 2, and 3 to 1.
- Auto tuning is not possible during overtravel (P-OT or N-OT signal OFF).
- Conduct auto tuning when no overtravel has occurred (both P-OT and N-OT signal ON).
- If using the $\overline{\text{S-ON}}$ signal to set the servo ON status, display [-][ ][t][U][n] before turning ON the $\overline{\text{S-ON}}$ signal.

3.4.7 CHECK OF SOFTWARE VERSION

(1) Mode Setting in Software Verson Check

When user constant Cn-00 is set to 06, the system enters the software version check mode.

Panel Display

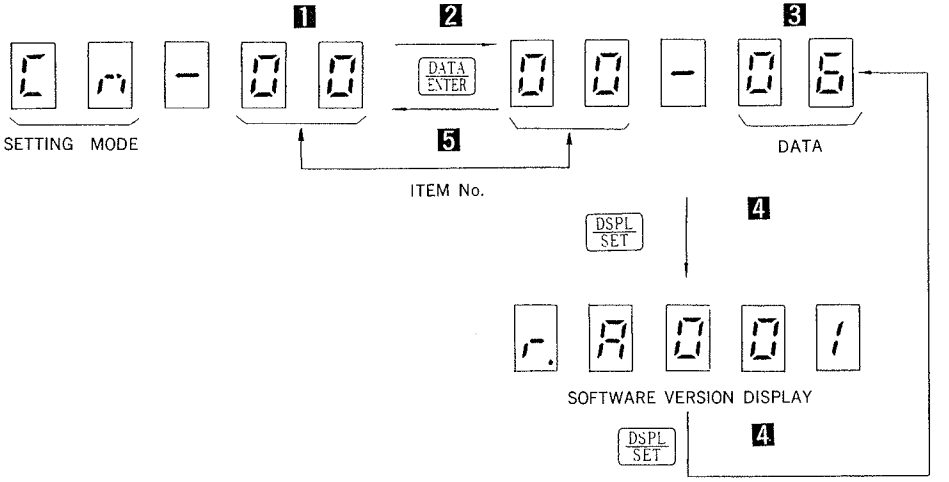

Fig. 3.10 Software Version Check Mode

1 Set up the item number 00 with the (∧) , (∨), (<) or (>) key.

2 With the DATA ENTER key, display the data related to the selected item number.

3 With the (∧) , (∨) , (<) or (>) key, select the number 06.

4 With the DSPL SET key, display the software version.

5 With the DATA ENTER key, return to the item No. display status.

6 Using the DSPL SET key, switch from the setting mode to the monitor mode.

(2) Software Version Display

Software Version No.

Type

A : Speed Control (SGDA, SGD)

d : Position Control (SGDA, SGD)

F : Speed/Torque Control (SGDE)

E : Position Control (SGDE)

b : SGDB

0 : DR2

3.5 MONITOR MODE

In this mode, the speed reference, torque reference, and other data can be monitored on the digital operator.
Table 3.7 lists the data that can be monitored.

Table 3.19 Data Monitored

Monitor No.	Date Monitored	
0 0	Feedback Speed	(r/min)
0 1	Speed Reference (at external setting speed control)	(r/min)
0 2	Torque Reference	(%)
0 3	No. of Pulses from Phase-U Edge	(Pulse)
0 4	Electrical Angle	(deg)
0 5	Internal Status Bit Display 1	(Refer to Table 3.20.)
0 6	Internal Status Bit Display 2	(Refer to Table 3.21.)
0 7	Speed Display of Reference Pulse	(r/min)
0 8	Position Deviation	(Pulse)

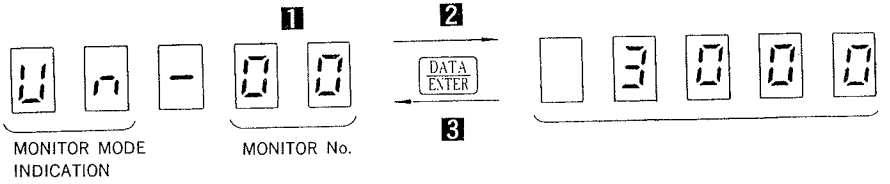

Fig. 3.11 Switch Functions in Monitor Mode

1 With the (∧) or (∨) key, select a desired monitor No.

2 With the DATA/ENTER key, initiate monitor display.

3 Using the DATA/ENTER key, return to the monitor No. selection status.

4 With the DSPL/SET key, switch from the monitor mode to the fault traceback mode.

Table 3.20 Bit Indication of Monitor Mode Un-05 Internal Status (Type SGDA, SGDE, SGD)

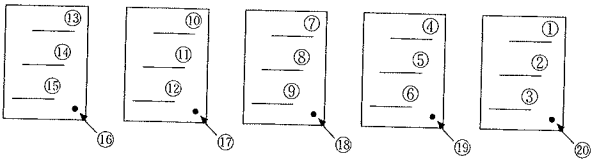

Bit No.	Symbol	Contents		Remarks
①	SVALM	Servo Alarm		
②	DBON	Dynamic Braking		
③	DIR	Reverse Run Mode		
④	TGON	Motor Running (Motor speed is TGON level or higher)		Select by setting of user constants Cn-01. (Type SGDE : TGON)
	CLT	Torque Limit		
⑤	COIN	Position Completion		
⑥	MSON	Mode Switch ON		
⑦	P-CL	Forward Current Limit	Internal setting speed	Not used at type SGDE
⑧	N-CL	Reverse Current Limit		Not used at type SGDE
⑨	B-ON	Motor under Present Condition		
⑩	PA	Phase-A *		
⑪	PB	Phase-B *		
⑫	PC	Phase-C *		
⑬	PU	Phase-U *		Incremental encoder only
⑭	PV	Phase-V *		Incremental encoder only
⑮	PW	Phase-W *		Incremental encoder only
⑯	SVON	Servo ON		
⑰	P-CON	P Operation Input		Select by setting of bit 2 of user constant Cn-02. (Type SGDE : P-CON)
	DR	Rotating Direction Input by External Setting Speed (ON at reverse, OFF at forward)		
⑱	P-OT	Forward Running Prohibit Input		
⑲	N-OT	Reverse Running Prohibit Input		
⑳	NONE			

* Type SGA : Light goes OFF when the input signal is set to high level.
Type SGDA, SGD : Light goes ON when the input signal is at high level.

Table 3.21 Bit Indication of Monitor Mode Un-06 Internal Status (Type SGDA, SGD)

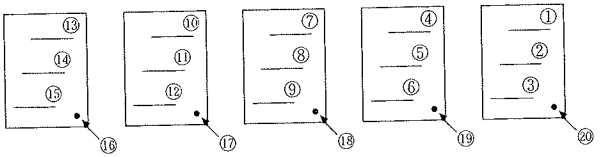

Bit No.	Symbol	Contents	Remarks
①	PUL	Reference Pulse Input	
②	SIGN	Input Pulse Sign	
③	CLR	Deviation Counter Clear Input	
④ to ⑳	NONE		

Table 3.22 Bit Indication of Monitor Mode Un-05 Internal Status (Type SGDB)

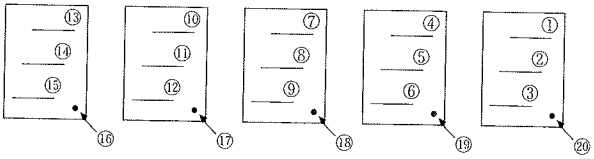

Bit No.	Symbol	Contents		Remarks
①	SVALM	Servo Alarm		1CN-31 (ALM)
②	DBON	Dynamic Braking		
③	DIR	Reverse Run Mode		Cn-02 bit 0, 2CN-7 (DIR)
④	TGON	Motor Running		
⑤	V-CMP COIN	Speed Agreed		
⑥	MSON	Mode Switch ON		
⑦	P-CL	Forward Current Limit	Internal Setting Speed Selection	1CN-45 (P-CL)
⑧	N-CL	Reverse Current Limit		1CN-46 (N-CL)
⑨	B-ON	Motor under Present Condition		
⑩	PA	Encoder Phase-A Input Signal set to High Level*		2CN-16 (PA), 2CN-17 (*PA)
⑪	PB	Encoder Phase-B Input Signal set to High Level*		2CN-18 (PB), 2CN-19 (*PB)
⑫	PC	Encoder Phase-C Input Signal set to High Level*		2CN-14 (PC), 2CN-15 (*PC)
⑬	PU	Encoder Phase-U Input Signal set to High Level*		
⑭	PV	Encoder Phase-V Input Signal set to High Level*		
⑮	PW	Encoder Phase-W Input Signal set to High Level*		
⑯	SVON	Servo ON		1CN-40 ($\overline{\text{S-ON}}$)
⑰	P-CON DR	P Operation Input Rotating Direction Input by External Setting Speed (ON at reverse, OFF at forward)		1CN-41 ($\overline{\text{P-CON}}$)
⑱	P-OT	Forward Running Prohibit Input		1CN-42 (P-OT), Cn-01 bit 2
⑲	N-OT	Reverse Running Prohibit Input		1CN-43 (N-OT), Cn-01 bit 3
⑳	SEN	SEN Signal Input		1CN-4 (SEN), Cn-01 bit 1

Table 3.23 Bit Indication of Monitor Mode Un-06 Internal Status (Type SGDB)

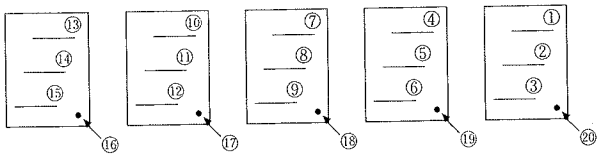

Bit No.	Symbol	Contents	Remarks
①	PUL	Reference Pulse Input	1CN-7 (PULS), 1CN-8 (*PLUS)
②	SIGN	Input Pulse Sign	1CN-11 (SIGN), 1CN-12 (*SIGN)
③	CLR	Deviation Counter Clear Input	1CN-15 (CLR), 1CN-14 (*CLR)
④	CLT	Current Limit	
⑤	BK	Brake Interlock Output	
⑥	OLWRN	Overload Alarm	
⑦	P-ON	Power ON	
⑧	S-RDY	Servo Ready	
⑨ to ⑳		Not used	

3.6 FAULT TRACEBACK MODE

In this mode, information on past fault occurrence can be displayed.
- Information on up to 10 past fault occurrence can be stored.
- When a fault is reset or the control power is turned ON, traceback data A.99 is saved (These data are also counted as one of a total of 10 stored items of fault information.)
- For the relationship between traceback data and fault descripitions, refer to Table 3.24

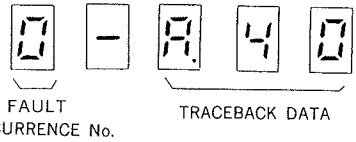

Fig. 3.12 Fault Traceback Mode

1 With the DSPL/SET key, select fault traceback mode.

2 With the (∧) or (∨) key, increase or decrease the fault occurrence number. The fault information related to the selected number is then displayed. (The higher the fault occurrence number, the older the fault occurrence.)

3 With the DSPL/SET key, switch from the fault traceback mode to the status display mode.

Table 3.24 Error Displays With Digital Operator and Traceback Data

Digital Operator (Traceback Data)	Detection	Remarks
A.00	Absolute Encoder Data Error	Only when absolute encoder is used (Type SGDB, DR2)
A.01	Absolute Encoder Data Error	Only when absolute encoder is used (Type SGDA).
A.02	User Constant Breakdown	
A.04	User Constant Setting Error	
A.10	Overcurrent	
A.20	Blown Fuse	Type DR2
A.30	Regeneration Error	Type SGDB, DR2
A.31	Position Error Pulse Overflow	Type DR2
A.40	Overvoltage	Type SGDA, SGDE, SGD
	Main Circuit Voltage Error	Type SGDB
A.51	Feedback Overspeed	Detected at 110% of max. speed.
A.70	Overload	Type SGDA, SGDE, DR2
A.71	Overload	Momentary overload
A.72	Overload	Continuous overload
A.80	Absolute Encoder Error	Only when absolute encoder is used (Type SGDA, SGDB, DR2)
A.81	Absolute Encoder Backup Error	Only when 12-bit absolute encoder is used.
A.82	Absolute Encoder Check sum Error	Only when 12-bit absolute encoder is used.
A.83	Absolute Encoder Battery Alarm	Only when 12-bit absolute encoder is used.
A.84	Absolute Encoder Data Error	Only when 12-bit absolute encoder is used.
A.85	Absolute Encoder Overspeed	Only when 12-bit absolute encoder is used.
A.A1	Heat sink overheat	Type SGDB
A.b1	Reference Input Read Error	
A.C1	Overrun	
A.C2	Encoder Phase Detection Fault	Only when incremental encoder is used.
A.C3	PA-, PG-phase Disconnection of PG Signal Line	
A.C4	PC Disconnection	
A.C5	Incremental Encoder Initial Pulse Error	Type DR2
A.C6	Full-closed Loop A-, B-phase Disconnection	Type DR2
A.C7	Full-closed Loop C-phase Disconnection	Type DR2
A.F1	Power Supply Line Open Phase	Type SGDB
A.F3	Momentary Power Loss Error	
A.99	Not Applicable to Alarm	
CPF00	Digital Operator Transmission Error 1	Digital operator error Not detected as traceback data.
CPF01	Digital Operator Transmission Error 2	

APPENDIX 1 SGD USER CONSTANT LIST FOR SPEED (TORQUE) CONTROL

Table 1.1 User-setup User Constant for Speed (Torque) Control Memorandam

User Constant	Bit No.	Contents / Standard Setting / Date of Change	Current									
Cn-01	0	SV-ON Mask	0									
	1	SEN Signal Mask	0									
	2	P-OT Mask	0									
	3	N-OT Mask	0									
	4	TGON Signal Changeover	0									
	5	Treatment of Momentary Power Loss Reset	0									
	6	Coasting to a Stop / DB Stop	0									
	7	DB ON / OFF after Stop	1									
	8	OT Zero Speed Stop	0									
	9	Zero Clamp after OT Stop	0									
	A B	Control Mode Selection	0									
	C D	Mode Switch Selection	0									
	E	Encoder Selection	0									
Cn-02	0	Reverse Rotation Mode	0									
	1	Home Position Error Mask	0									
	2	Contact Reference Mode	0									

Table 1.1 User-setup User Constant for Speed (Torque) Control Memorandam (Cont'd)

User Constant	Contents / Standard Setting/Data of Change		Current									
Cn-03	Speed Reference Gain	[(r/min)/V]	500									
Cn-04	Speed Loop Gain	[Hz]	80									
Cn-05	Speed Loop Integral Time	[ms]	20									
Cn-06	Emergency Stop Torque	[%]	Max. Torque									
Cn-07	Soft Start Time (Acceleration)	[ms]	0									
Cn-08	Forward Running Torque Limit	[%]	Max. Torque									
Cn-09	Reverse Running Torque Limit	[%]	Max. Torque									
Cn-0A	PG Dividing Ratio	[P/R]	2048									
Cn-0B	Zero-speed Level	[r/min]	20									
Cn-0C	Mode Switch (Torque Reference)	[%]	200									
Cn-0D	Mode Switch (Speed Reference)	[r/min]	0									
Cn-0E	Mode Switch (Motor Acceleration Detection)	[10(r/min)/s]	0									
Cn-0F	Zero-clamp Level	[r/min]	10									
Cn-10	JOG Speed	[r/min]	500									
Cn-11	Number of Encoder Pulses	[P/R]	2048									
Cn-12	Delay Time from Brake Reference to SVOFF	[10ms]	0									
Cn-13	Torque Reference Gain	[1/10V/Rated Torque]	30									
Cn-14	Speed Limit with Torque Control !	[r/min]	4500									
Cn-15	Brake Timing at Motor Rotation (Speed level at which brake reference is output.)	[r/min]	100									
Cn-16	Brake Timing at Motor Rotation (Wating time from SVOFF to brake reference output.)	[r/min]	50									
Cn-17	Torque Reference Filter Time	[μs]	4									
Cn-18	Forward External Current Limit	[%]	100									
Cn-19	Reverse External Current Limit	[%]	100									
Cn-1A	Position Loop Gain	[μ/S]	40									
Cn-1F	1st Speed	[r/min]	100									
Cn-20	2nd Speed	[r/min]	200									
Cn-21	3rd Speed	[r/min]	300									
Cn-22	Speed Coincidence Signal Output Width	[r/min]	10									
Cn-23	Soft Start Time (Deceleration)	[ms]	0									

Note:
User constants Cn-1B, -1C, -1D and -1E are not used. Do not change them.

APPENDIX 2 SGD USER CONSTANT LIST FOR POSITION CONTROL

Table 2.1 User-setup User Constant for Positioning Control Memorandam

User Constant	Bit No.	Contents / Standard Setting / Date of Change	Current									
Cn-01	0	SV-ON Mask	0									
	1	Not Used (Do not abjust)	0									
	2	P-OT Mask	0									
	3	N-OT Mask	0									
	4	TGON Signal Changeover	0									
	5	Treatment of Momentary Power Loss Reset	0									
	6	Coasting to a Stop / DB Stop	0									
	7	DB ON / OFF after Stop	1									
	8	OT Zero Speed Stop	0									
	9	Zero Clamp after OT Stop	0									
	A	Position Error Clear at Base Blocking	0									
	B	Mode Switch Function With or Without	0									
	C	Mode Switch Selection	0									
	D		0									
	E	Encoder Selection	0									
Cn-02	0	Reverse Rotation Mode	0									
	1	Home Position Error Mask	0									
	2	Contact Reference Mode	0									
	3	Reference Pulse Mode	0									
	4		0									
	5		0									
	6	Don't change	0									
	7	Don't change	0									
	8	Not Used (Don't change)	0									
	9		0									
	A	Error Counter Clear	0									
	B	Not Used (Don't change)	0									
	C		0									
	D	Reference Pulse Reversal	0									
	E	Output Level Changeover	0									
	F	Don't change	0									

Table 2.2. User-setup User Constant for Positioning Control Memorandam (Cont'd)

User Constant	Contents	Standard Setting/Date of Change	Current									
Cn-04	Speed Loop Gain	[Hz]	80									
Cn-05	Speed Loop Integral Time	[ms]	20									
Cn-06	Emergency Stop Torque	[%]	Max. Torque									
Cn-07	Soft Start Time (Acceleration)	[ms]	0									
Cn-08	Forward Torque Limit	[%]	Max. Torque									
Cn-09	Reverse Torque Limit	[%]	Max. Torque									
Cn-0A	PG Frequency Dividing Ratio Setting	[P/R]	2048									
Cn-0B	Zero-speed Level	[r/min]	20									
Cn-0C	Mode Switch (Torque Reference)	[%]	200									
Cn-0D	Mode Switch (Speed Reference)	[r/min]	0									
Cn-0E	Mode Switch (Motor Acceleration Detection)	[10(r/min)/s]	0									
Cn-0F	Mode Switch (Error Pulse)	[r/min]	10									
Cn-10	JOG Speed	[r/min]	500									
Cn-11	Number of Encoder Pulses	[P/R]	2048									
Cn-12	Delay Time from Brake Reference to SVOFF	[10ms]	0									
Cn-15	Brake Timing at Motor Rotation (Speed level at which brake reference is output.)	[r/min]	100									
Cn-16	Brake Timing at Motor Rotation (Wating time from SVOFF to brake reference output.)	[r/min]	50									
Cn-17	Torque Reference Filter Time	[μs]	4									
Cn-18	Forward External Current Limit	[%]	100									
Cn-19	Reverse External Current Limit	[%]	100									
Cn-1A	Position Loop Gain	[μ/S]	40									
Cn-1C	Bias	[r/min]	0									
Cn-1D	Feed Forward	[%]	0									
Cn-1E	Overflow	[×256 Reference Unit]	1024									
Cn-1F	1st Speed	[r/min]	100									
Cn-20	2nd Speed	[r/min]	200									
Cn-21	3rd Speed	[r/min]	300									
Cn-23	Soft Start Time (Deceleration)	[ms]	0									
Cn-24	Electronic Gear (mumerator)		4									
Cn-25	Electronic Gear (Denominator)		1									
Cn-26	Reference Pulse Accel/Decel Time Constant	[ms]	0									

Note:
User constants Cn-03, -13, -14 and -22 are not used. Do not change them.

APPENDIX 3 SGDA USER CONSTANT LIST FOR SPEED (TORQUE) CONTROL

Table 3.1 User-setup User Constant for Speed (Torque) Control Memorandam

User Constant	Bit No.	Contents / Standard Setting/Date of Change	Current										
Cn-01	0	SV-ON Mask	0										
	1	SEN Signal	0										
	2	P-OT Mask	0										
	3	N-OT Mask	0										
	4	TGON Signal Changeover	0										
	5	Treatment of Momentary Power Loss Reset	0										
	6	Coasting to a Stop/DB Stop	0										
	7	DB ON/OFF after Stop	0										
	8	OT Zero Speed Stop	0										
	9	Zero Clamp after OT Stop	0										
	A	Control Mode Selection	0										
	B		0										
	C	Mode Switch Selection	0										
	D		0										
	E	Encoder Selection	0										
	F	Torque Feed-Forward Function	0										
Cn-02	0	Reverse Rotation Mode	0										
	1	Home Position Error Mask	0										
	2	Internal Setting Speed Selection Function	0										
	3	Not Used	0										
	4		0										
	5		0										
	6		0										
	7		0										
	8	Motor Selection	0										
	9	Not Used (Do not adjust)	0										
	A		0										
	B	Integration Time Constant Setting Unit	0										
	C	Torque Reference Filter	0										
	D	Not Used (Do not adjust)	0										
	E		0										
	F	Torque Reference Input Selection	0										

Table 3.2 User-setup User Constant for Speed (Torque) Control Memorandam

User Constant	Contents / Standard Setting/Date of Change	Current									
Cn-03	Speed Reference Gain [(r/min)/V]	500									
Cn-04	Speed Loop Gain [Hz]	80									
Cn-05	Speed Loop Integral Time Constant [ms]	20									
Cn-06	Emergency Stop Torque [%]	Max. Torque									
Cn-07	Soft Start Time (Acceleration) [ms]	0									
Cn-08	Forward Torque Limit [%]	Max. Torque									
Cn-09	Reverse Torque Limit [%]	Max. Torque									
Cn-0A	PG Frequency Dividing Ratio Setting [P/R]	2048									
Cn-0B	Zero-speed Level [r/min]	20									
Cn-0C	Mode Switch (Torque Reference) [%]	200									
Cn-0D	Mode Switch (Speed Reference) [r/min]	0									
Cn-0E	Mode Switch (Motor Acceleration Detection) [10 (r/min)/s]	0									
Cn-0F	Zero Clamp Level [r/min]	10									
Cn-10	JOG Speed [r/min]	500									
Cn-11	Number of Encoder Pulses [P/R]	2048									
Cn-12	Delay Time from Brake Reference to SVOFF [10ms]	0									
Cn-13	Torque Reference Gain [1/10V/Rating]	30									
Cn-14	Speed Limit at Torque Control II [r/min]	4500									
Cn-15	Brake Timing Speed [r/min]	100									
Cn-16	Brake Timing Time [10ms]	50									
Cn-17	Torque Reference Filter Time Constant [100μs]	4									
Cn-18	Forward External Current Limit [%]	100									
Cn-19	Reverse External Current Limit [%]	100									
Cn-1A	Position Loop Gain [1/s]	40									
Cn-1F	1st Speed [r/min]	100									
Cn-20	2nd Speed [r/min]	200									
Cn-21	3rd Speed [r/min]	300									
Cn-22	Speed Agreed Signal Output Width [r/min]	10									
Cn-23	Soft Start Time (Deceleration) [ms]	0									
Cn-28	Speed Loop Compensation Constant	0									
Cn-29	Axis Address	0									

APPENDIX 4 SGDA USER CONSTANT LIST FOR POSITION CONTROL

Table 4.1 User-setup User Constant for Position Control Memorandam

User Constant	Bit No.	Contents / Standard Setting/Date of Change	Current										
Cn-01	0	SV-ON Mask	0										
	1	Not Used (Do not adjust)	0										
	2	P-OT Mask	0										
	3	N-OT Mask	0										
	4	TGON Signal Changeover	0										
	5	Treatment of Momentary Power Loss Reset	0										
	6	Coasting to a Stop/DB Stop	0										
	7	DB ON/OFF after Stop	1										
	8	OT Zero Speed Stop	0										
	9	Zero Clamp after OT Stop	0										
	A	Position Deviation Clear at Base Blocking	0										
	B	Mode Switch Function With or Without	0										
	C	Mode Switch Selection	0										
	D		0										
	E	Encoder Selection	0										
	F	Internal Speed Selection/INHIBIT Function	0										
Cn-02	0	Reverse Rotation Mode	0										
	1	Home Position Error Mask	0										
	2	Contact Reference Mode	0										
	3	Reference Pulse Mode	0										
	4		0										
	5		0										
	6	Monitor Changeover (TRQ-M)	0										
	7	Monitor Changeover (VTG-M)	0										
	8	Motor Selection	0/1										
	9	Not Used (Do not adjust)	0										
	A	Deviation Counter Clear	0										
	B	Integration Time Constant Setting Unit	0										
	C	Torque Reference Filter	0										
	D	Reference Pulse Reversal	0										
	E	Monitor Output Level Changeover	0										
	F	Reference Pulse	0										

Note : Factory setting of bit 8 on Cn-02 is either 0 (Type SGDA-***S) or 1 (Type SGDA-***SP).

Table 4.2 User-setup User Constant for Position Control Memorandam

User Constant	Contents / Standard Setting/Date of Change	Current									
Cn-04	Speed Loop Gain [Hz]	80									
Cn-05	Speed Loop Integral Time Constant [ms]	20									
Cn-06	Emergency Stop Torque [%]	Max. Torque									
Cn-07	Soft Start Time (Acceleration) [ms]	0									
Cn-08	Forward Torque Limit [%]	Max. Torque									
Cn-09	Reverse Torque Limit [%]	Max. Torque									
Cn-0A	PG Frequency Dividing Ratio Setting [P/R]	2048									
Cn-0B	Zero-speed Level [r/min]	20									
Cn-0C	Mode Switch (Torque Reference) [%]	200									
Cn-0D	Mode Switch (Speed Reference) [r/min]	0									
Cn-0E	Mode Switch (Motor Acceleration Detection) [10 (r/min)/s]	0									
Cn-0F	Zero Clamp Level [r/min]	10									
Cn-10	JOG Speed [r/min]	500									
Cn-11	Number of Encoder Pulses [P/R]	2048									
Cn-12	Delay Time from Brake Reference to SVOFF [10ms]	0									
Cn-15	Brake Timing Speed [r/min]	100									
Cn-16	Brake Timing Time [ms]	50									
Cn-17	Torque Reference Filter Time Constant [μ s]	4									
Cn-18	Forward External Current Limit [%]	100									
Cn-19	Reverse External Current Limit [%]	100									
Cn-1A	Position Loop Gain [1/s]	40									
Cn-1B	Position Completion Width [Reference Unit]	7									
Cn-1C	Bias [r/min]	0									
Cn-1D	Feed Forward [%]	0									
Cn-1E	Overflow [×256 Reference Unit]	1024									
Cn-1F	1st Speed [r/min]	100									
Cn-20	2nd Speed [r/min]	200									
Cn-21	3rd Speed [r/min]	300									
Cn-23	Soft Start Time (Deceleration) [ms]	0									
Cn-24	Electronic Gear (Molecule)	4									
Cn-25	Electronic Gear (Denominator)	1									
Cn-26	Reference Pulse Accel/Decel Time Constant [ms]	0									
Cn-27	Feed Forward Reference Filter [ms]	0									
Cn-28	Speed Loop Compensation Constant	0									
Cn-29	Axis Address	0									

APPENDIX 5 SGDE USER CONSTANT LIST FOR SPEED CONTROL (TORQUE CONTROL)

Table 5.1 User-setup User Constant for Speed (Torque) Control Memorandam

User Constant	Bit No.	Contents / Standard Setting/Date of Change	Current									
Cn-01	0	SV-ON Mask	0									
	2	P-OT Mask	0									
	3	N-OT Mask	0									
Cn-02	0	Reverse Rotation Mode	0									
	2	Contact Reference Mode	0									
	C *	Torque Reference Filter	0									
	E	Torque Reference Input Selection	0									

*Setting can be changed at software versions 4 or above.

Table 5.2 User-setup User Constant for Speed (Torque) Control Memorandam

User Constant	Contents / Standard Setting/Date of Change	Current									
Cn-03	Speed Reference Gain [(r/min)/V]	500									
Cn-04	Speed Loop Gain [Hz]	80									
Cn-05	Speed Loop Integral Time Constant [ms]	20									
Cn-07	Soft Start Time (Acceleration) [ms]	0									
Cn-08	Forward Torque Limit [%]	Max. Torque									
Cn-09	Reverse Torque Limit [%]	Max. Torque									
Cn-0A	PG Frequency Dividing Ratio Setting [P/R]	1024									
Cn-0B	Zero-speed Level [r/min]	20									
Cn-0C	Mode Switch (Torque Reference) [%]	200									
Cn-0F	Zero-clamp level [r/min]	10									
Cn-12	Delay Time from Brake Reference to SVOFF [10ms]	0									
Cn-13	Torque Reference Gain [1/10V/Rated Torque]	30									
Cn-14	Speed Limit at Torque Control 1 [r/min]	Max. Speed									
Cn-17	Torque Reference Filter Constant [100μs]	4									
Cn-18	Forward External Torque Limit [%]	100									
Cn-19	Reverse External Torque Limit [%]	100									
Cn-1A	Position Loop Gain [1/S]	40									
Cn-1F	1st Speed [r/min]	100									
Cn-20	2nd Speed [r/min]	200									
Cn-21	3rd Speed [r/min]	300									
Cn-23	Soft Start Time (Deceleration) [ms]	0									

APPENDIX 6 SGDE USER CONSTANT LIST FOR POSITION CONTROL

Table 6.1 User-setup User Constant for Position Control Memorandam

User Constant	Bit No.	Contents / Standard Setting/Date of Change	Current									
Cn-01	0	SV-ON Mask	0									
	2	P-OT Mask	0									
	3	N-OT Mask	0									
Cn-02	0	Reverse Rotation Mode	0									
	3	Reference Pulse Mode	0									
	4		0									
	5		0									
	A	Deviation Counter Clear	0									
	C *	Torque Reference Filter	0									
	E	Monitor Output Level Changeover	0									

* Setting can be changed at software versions 4 or above.

Table 6.2 User-setup User Constant for Position Control Memorandam

User Constant	Contents / Standard Setting/Date of Change	Current									
Cn-04	Speed Loop Gain [Hz]	80									
Cn-05	Speed Loop Integral Time Constant [ms]	20									
Cn-12	Delay Time from Brake Reference to SVOFF [10ms]	0									
Cn-17	Torque Reference Filter Time Constant [μ s]	4									
Cn-1A	Position Loop Gain [1/s]	40									
Cn-1B	Positioning Completion Range [reference unit]	7									
Cn-24	Electric Gear Ratio [numerator]	4									
Cn-25	Electric Gear Ratio [denominator]	1									
Cn-26	Reference Pulse Acceleration/Deceleration Constant [ms]	0									

APPENDIX 7 SGDB USER CONSTANT LIST FOR POSITION CONTROL/SPEED (TORQUE) CONTROL

Table 7.1 User-setup User Constant for Position Control Memorandam

User Constant	Bit No.	Contents / Standard Setting/Date of Change	Current										
Cn-01	0	SV-ON Mask	0										
	1	SEN Signal	0										
	2	P-OT Mask	0										
	3	N-OT Mask	0										
	4	Not used (Do not adjust)	0										
	5	Treatment of Momentary Power Loss Reset	0										
	6	Coasting to a Stop/DB Stop	0										
	7	DB ON/OFF after Stop	1										
	8	OT Zero Speed Stop	0										
	9	Zero Clamp after OT Stop	0										
	A	Position Deviation Clear at Base Blocking	0										
	B	Mode Switch Function With or Without	0										
	C	Mode Switch Selection	0										
	D		0										
	E	Encoder Selection	0										
	F	Not used (Do not adjust)	0										
Cn-02	0	Reverse Rotation Mode	0										
	1	Home Position Error Mask	0										
	2	Contact Reference Mode	0										
	3	Reference Pulse Mode	0										
	4		0										
	5		0										
	6	Monitor Changeover (TRQ-M)	0										
	7	Monitor Changeover (VTG-M)	0										
	8	Analog Current Control Function	0										
	9	Torque Feed Forward Function	0										
	A	Deviation Counter Clear Signal	0										
	B	Not used (Do not adjust)	0										
	C	Torque Reference Filter	0										
	D	Reference Pulse Reversal	0										
	E	Monitor Output Level Changeover	0										
	F	Reference Pulse	0										

Table 7.2 User-setup User Constant for Position Control Memorandam

User Constant	Contents / Standard Setting/Date of Change	Current										
Cn-03	Speed Reference Gain [(r/min)/V]	*										
Cn-04	Speed Loop Gain [Hz]	80										
Cn-05	Speed Loop Integral Time Constant [ms]	20										
Cn-06	Emergency Stop Torque [%]	Max. Torque										
Cn-07	Soft Start Time (Acceleration) [ms]	0										
Cn-08	Forward Torque Limit [%]	Max. Torque										
Cn-09	Reverse Torque Limit [%]	Max. Torque										
Cn-0A	PG Frequency Dividing Ratio Setting [P/R]	*										
Cn-0B	Zero-speed Level [r/min]	20										
Cn-0C	Mode Switch (Torque Reference) [%]	200										
Cn-0D	Mode Switch (Speed Reference) [r/min]	0										
Cn-0E	Mode Switch (Motor Acceleration Detection) [10 (r/min)/s]	0										
Cn-0F	Mode Switch (Deviation Pulse) [r/min]	0										
Cn-10	JOG Speed [r/min]	500										
Cn-11	Number of Encoder Pulses [P/R]	*										
Cn-12	Delay Time from Brake Reference to SVOFF [10ms]	0										
Cn-13	Torque Reference Gain [1/10V/Rated Torque]	30										
Cn-14	Speed Control during Torque Control II [r/min]	4500										
Cn-15	Brake Timing Speed [r/min]	100										
Cn-16	Brake Timing Time [ms]	50										
Cn-17	Torque Reference Filter Time Constant [μ s]	4										
Cn-18	Forward External Current Limit [%]	100										
Cn-19	Reverse External Current Limit [%]	100										
Cn-1A	Position Loop Gain [1/S]	40										
Cn-1B	Position Completion Width [Reference Unit]	7										
Cn-1C	Bias [r/min]	0										
Cn-1D	Feed Forward [%]	0										
Cn-1E	Overflow [×256 Reference Unit]	1024										
Cn-1F	1st Speed [r/min]	100										
Cn-20	2nd Speed [r/min]	200										
Cn-21	3rd Speed [r/min]	300										
Cn-22	Speed Agreed Signal Output Width [r/min]	10										
Cn-23	Soft Start Time (Deceleration) [ms]	0										
Cn-24	Electronic Gear (Molecule)	4										
Cn-25	Electronic Gear (Denominator)	1										

Table 7.2 User-setup User Constant for Position Control Memorandam (Cont'd)

Cn-26	Reference Pulse Accel/Decel Time Constant [ms]	0										
Cn-27	Feed Forward Reference Filter [ms]	0										
Cn-28	Speed Loop Compensation Constant	0										
Cn-29	Zero Clamp Level [r/min]	10										
Cn-2A	Motor Selection	*										
Cn-2B	Control Method Selection	0										
Cn-2C	PG Power Supply Voltage Change	52500										
Cn-2D	Output Signal Selection	210										

* Setting prior to shipping

SERVOPACK Type	Motor Type	Cn-2A	Cn-11 Cn-0A	Cn-03
SGDB-05ADG	SGMG-05A * A	142	8192	250
SGDB-10ADG	SGMG-09A * A	143		
SGDB-15ADG	SGMG-13A * A	144		
SGDB-20ADG	SGMG-20A * A	145		
SGDB-30ADG	SGMG-30A * A	146		
SGDB-44ADG	SGMG-44A * A	147		
SGDB-60ADG	SGMG-55A * A	148		
SGDB-75ADG	SGMG-75A * A	149		
SGDB-1AADG	SGMG-1AA * A	140		
SGDB-1EADG	SGMG-1EA * A	150		
SGDB-03ADM	SGMG-03A * B	171	8192	167
SGDB-07ADM	SGMG-06A * B	172		
SGDB-10ADM	SGMG-09A * B	173		
SGDB-15ADM	SGMG-12A * B	174		
SGDB-20ADM	SGMG-20A * B	175		
SGDB-30ADM	SGMG-30A * B	176		
SGDB-44ADM	SGMG-44A * B	177		
SGDB-60ADM	SGMG-60A * B	178		
SGDB-10ADS	SGMS-10A * A	163	4096	500
SGDB-15ADS	SGMS-15A * A	164		
SGDB-20ADS	SGMS-20A * A	165		
SGDB-30ADS	SGMS-30A * A	166		
SGDB-44ADS	SGMS-40A * A	167		
SGDB-50ADS	SGMS-50A * A	168		
SGDB-30ADD	SGMD-22A * A	155	1024	333
SGDB-44ADD	SGMD-32A * A	156		
SGDB-50ADD	SGMD-40A * A	157		
SGDB-05AD	SGM-04A	106	2048	500
SGDB-10AD	SGM-08A	107		
SGDB-05ADP	SGMP-04A	126		
SGDB-10ADP	SGMP-08A	127		
SGDB-15ADP	SGMP-15A	128		

APPENDIX 8 DR2 USER CONSTANT LIST FOR SPEED (TORQUE) CONTROL

Table 8.1 User-setup User Constant for Speed (Torque) Control Memorandam

User Constant	Bit No.	Contents	Standard Setting/Date of Change	Current										
	0	SV-ON Mask		0										
	1	SEN Signal		0										
	2	P-OT Mask		0										
	3	N-OT Mask		0										
	4	CLT Signal Changeover		0										
	5	Not used		0										
	6	Coasting to a Stop/DB Stop		0										
	7	DB ON/OFF after Stop		0										
Cn-01	8	OT Zero Speed Stop		0										
	9	Zero Clamp after OT Stop		0										
	A	Control Mode Selection		0										
	B			0										
	C	Mode Switch Selection		0										
	D			0										
	E	TGON Signal Changeover		0										
	F	Torque Feed-Forward Function		0										
	0	Reverse Rotation Mode		0										
	1	Home Position Error Mask		0										
	2	Contact Input Speed Control		0										
	3	Not Used		0										
	4			0										
	5			0										
	6			0										
	7			0										
Cn-02	8	Motor Selection		0										
	9	Encoder Selection		0										
	A	Not Used (Do not adjust)		0										
	B	Control Mode Selection		0										
	C	Torque Reference Filter		0										
	D	Not Used (Do not adjust)		0										
	E			0										
	F	Torque Reference Input Selection		0										

Table 8.2 User-setup User Constant for Speed (Torque) Control Memorandam

User Constant	Contents / Standard Setting/Date of Change	Current										
Cn-03	Speed Reference Gain [(r/min)/V]	500										
Cn-04	Speed Loop Gain [Hz]	80										
Cn-05	Speed Loop Integral Time Constant [ms]	2000										
Cn-06	Emergency Stop Torque [%]	Max. Torque										
Cn-07	Soft Start Time (Acceleration) [ms]	0										
Cn-08	Forward Torque Limit [%]	Max. Torque										
Cn-09	Reverse Torque Limit [%]	Max. Torque										
Cn-0A	Dividing Ratio Setting [P/R]	2048										
Cn-0B	Zero-speed Level [r/min]	20										
Cn-0C	Mode Switch (Torque Reference) [%]	200										
Cn-0D	Mode Switch (Speed Reference) [r/min]	0										
Cn-0E	Mode Switch (Motor Acceleration Detection) [10 (r/min)/s]	0										
Cn-10	JOG Speed [r/min]	500										
Cn-11	Number of Encoder Pulses [P/R]	2048										
Cn-12	Delay Time from Brake Reference to SVOFF [10ms]	0										
Cn-13	Torque Reference Gain [1/10V/Rating]	30										
Cn-14	Speed Limit at Torque Control I [r/min]	4500										
Cn-15	Speed Level for Brake Reference output during motor operation [r/min]	100										
Cn-16	Output timing of brake reference during motor operation [10ms]	50										
Cn-17	Torque Reference Filter Time Constant [100μs]	4										
Cn-18	Forward External Torque Limit [%]	100										
Cn-19	Reverse External Torque Limit [%]	100										
Cn-1A	Position Loop Gain [1/s]	40										
Cn-1F	1st Speed [r/min]	100										
Cn-20	2nd Speed [r/min]	200										
Cn-21	3rd Speed [r/min]	300										
Cn-22	Speed Agreed Signal Output Width [r/min]	10										
Cn-23	Soft Start Time (Deceleration) [ms]	0										
Cn-28	Speed Loop Compensation Constant	0										
Cn-29	Zero-clamp Level	10										

APPENDIX 9 DR2 USER CONSTANT LIST FOR POSITION CONTROL

Table 9.1 User-setup User Constant for Position Control Memorandam

User Constant	Bit No.	Contents / Standard Setting/Date of Change	Current										
Cn-01	0	SV-ON Mask	0										
	1	Not Used (Do not adjust)	0										
	2	P-OT Mask	0										
	3	N-OT Mask	0										
	4	Not used	0										
	5	Not used	0										
	6	Coasting to a Stop/DB Stop	0										
	7	DB ON/OFF after Stop	1										
	8	OT Zero Speed Stop	0										
	9	Zero Clamp after OT Stop	0										
	A	Position Deviation Clear at Base Blocking	0										
	B	Mode Switch Function With or Without	0										
	C	Mode Switch Selection	0										
	D		0										
	E	TGON Signal Changeover	0										
	F	Internal Speed Selection/INHIBIT Function	0										
Cn-02	0	Reverse Rotation Mode	0										
	1	Home Position Error Mask	0										
	2	Contact Input Speed Control	0										
	3	Reference Pulse Mode	0										
	4		0										
	5		0										
	6	Not used	0										
	7	Not used	0										
	8	Motor Selection	0/1										
	9	Encoder Selection	0										
	A	Deviation Counter Clear	0										
	B	Control Mode Selection	0										
	C	Torque Reference Filter	0										
	D	Reference Pulse Reversal	0										
	E	Position Error Monitor Level	0										
	F	Reference Pulse	0										

Table 9.1 User-setup User Constant for Position Control Memorandam

User Constant	Contents / Standard Setting/Date of Change	Current										
Cn-05	Speed Loop Integral Time Constant [ms]	2000										
Cn-06	Emergency Stop Torque [%]	Max. Torque										
Cn-07	Soft Start Time (Acceleration) [ms]	0										
Cn-08	Forward Torque Limit [%]	Max. Torque										
Cn-09	Reverse Torque Limit [%]	Max. Torque										
Cn-0A	Dividing Ratio Setting [P/R]	2048										
Cn-0B	Zero-speed Level [r/min]	20										
Cn-0C	Mode Switch (Torque Reference) [%]	200										
Cn-0D	Mode Switch (Speed Reference) [r/min]	0										
Cn-0E	Mode Switch (Acceleration Reference) [×256 reference unit]	0										
Cn-0F	Mode Switch (error pulse) [Reference unit]	10										
Cn-10	JOG Speed [r/min]	500										
Cn-11	Number of Encoder Pulses [P/R]	2048										
Cn-12	Delay Time from Brake Reference to SVOFF [10ms]	0										
Cn-15	Speed level for brake reference output during motor operation [r/min]	100										
Cn-16	Output timing of brake reference during motor operation [10ms]	50										
Cn-17	Torque Reference Filter Time Constant [100μs]	4										
Cn-18	Forward External Torque Limit [%]	100										
Cn-19	Reverse External Torque Limit [%]	100										
Cn-1A	Position Loop Gain [1/s]	40										
Cn-1B	Position Completion Width [Reference Unit]	7										
Cn-1C	Bias [r/min]	0										
Cn-1D	Feed Forward [%]	0										
Cn-1E	Overflow [×256 reference unit]	1024										
Cn-1F	1st Speed (contact input speed control) [r/min]	100										
Cn-20	2nd Speed (contact input speed control) [r/min]	200										
Cn-21	3rd Speed (contact input speed control) [r/min]	300										
Cn-23	Soft Start Time (Deceleration) [ms]	0										
Cn-24	Electronic Gear (Molecule)	4										
Cn-25	Electronic Gear (Denominator)	1										
Cn-26	Reference Pulse Accel/Decel Time Constant [100μs]	0										
Cn-27	Feed Forward Reference Filter [100μs]	0										
Cn-28	Speed Loop Compensation Constant	0										

NOTES

NOTES

NOTES

DIGITAL OPERATOR
INSTRUCTIONS

TOKYO OFFICE
New Pier Takeshiba South Tower, 1-16-1, Kaigan, Minatoku, Tokyo 105-0022 Japan
Phone 81-3-5402-4511 Fax 81-3-5402-4580

YASKAWA ELECTRIC AMERICA, INC.
Chicago-Corporate Headquarters
2942 MacArthur Blvd. Northbrook, IL 60062-2028, U.S.A.
Phone 1-847-291-2340 Fax 1-847-498-2430
Chicago-Technical Center
3160 MacArthur Blvd. Northbrook, IL 60062-1917, U.S.A.
Phone 1-847-291-0411 Fax 1-847-291-1018

MOTOMAN INC. HEADQUARTERS
805 Liberty Lane West Carrollton, OH 45449, U.S.A.
Phone 1-937-847-6200 Fax 1-937-847-6277

YASKAWA ELÉTRICO DO BRASIL COMÉRCIO LTDA.
Avenida Fagundes Filho, 620 Bairro Saude-Sao Paulo-SP, Brazil CEP: 04304-000
Phone 55-11-5071-2552 Fax 55-11-5581-8795

YASKAWA ELECTRIC EUROPE GmbH
Am Kronberger Hang 2, 65824 Schwalbach, Germany
Phone 49-6196-569-300 Fax 49-6196-888-301

Motoman Robotics AB
Box 504 S38525 Torsås, Sweden
Phone 46-486-48800 Fax 46-486-41410

Motoman Robotec GmbH
Kammerfeldstraße 1, 85391 Allershausen, Germany
Phone 49-8166-900 Fax 49-8166-9039

YASKAWA ELECTRIC UK LTD.
1 Hunt Hill Orchardton Woods Cumbernauld, G68 9LF, United Kingdom
Phone 44-1236-735000 Fax 44-1236-458182

YASKAWA ELECTRIC KOREA CORPORATION
Paik Nam Bldg. 901 188-3, 1-Ga Euljiro, Joong-Gu Seoul, Korea
Phone 82-2-776-7844 Fax 82-2-753-2639

YASKAWA ELECTRIC (SINGAPORE) PTE. LTD.
151 Lorong Chuan, #04-01, New Tech Park Singapore 556741, Singapore
Phone 65-282-3003 Fax 65-289-3003

YATEC ENGINEERING CORPORATION
Shen Hsiang Tang Sung Chiang Building 10F 146 Sung Chiang Road, Taipei, Taiwan
Phone 886-2-2563-0010 Fax 886-2-2567-4677

BEIJING OFFICE
Room No. 301 Office Building of Beijing International Club, 21
Jianguomenwai Avenue, Beijing 100020, China
Phone 86-10-6532-1850 Fax 86-10-6532-1851

SHANGHAI OFFICE
27 Hui He Road Shanghai 200437 China
Phone 86-21-6553-6600 Fax 86-21-6531-4242

YASKAWA JASON (HK) COMPANY LIMITED
Rm. 2909-10, Hong Kong Plaza, 186-191 Connaught Road West, Hong Kong
Phone 852-2803-2385 Fax 852-2547-5773

TAIPEI OFFICE
Shen Hsiang Tang Sung Chiang Building 10F 146 Sung Chiang Road, Taipei, Taiwan
Phone 886-2-2563-0010 Fax 886-2-2567-4677

SHANGHAI YASKAWA-TONGJI M & E CO., LTD.
27 Hui He Road Shanghai China 200437
Phone 86-21-6531-4242 Fax 86-21-6553-6060

BEIJING YASKAWA BEIKE AUTOMATION ENGINEERING CO., LTD.
30 Xue Yuan Road, Haidian, Beijing P.R. China Post Code: 100083
Phone 86-10-6233-2782 Fax 86-10-6232-1536

SHOUGANG MOTOMAN ROBOT CO., LTD.
7, Yongchang-North Street, Beijing Economic Technological Investment & Development Area,
Beijing 100076, P.R. China
Phone 86-10-6788-0551 Fax 86-10-6788-2878

YASKAWA ELECTRIC CORPORATION

YASKAWA

Specifications are subject to change without notice
for ongoing product modifications and improvements.

TOE-S800-15.3C

©Printed in Japan February 1998 93-1

592-174, 592-183